Float Inc. Preliminary Exposé of its LNG Terminal for EUROPE

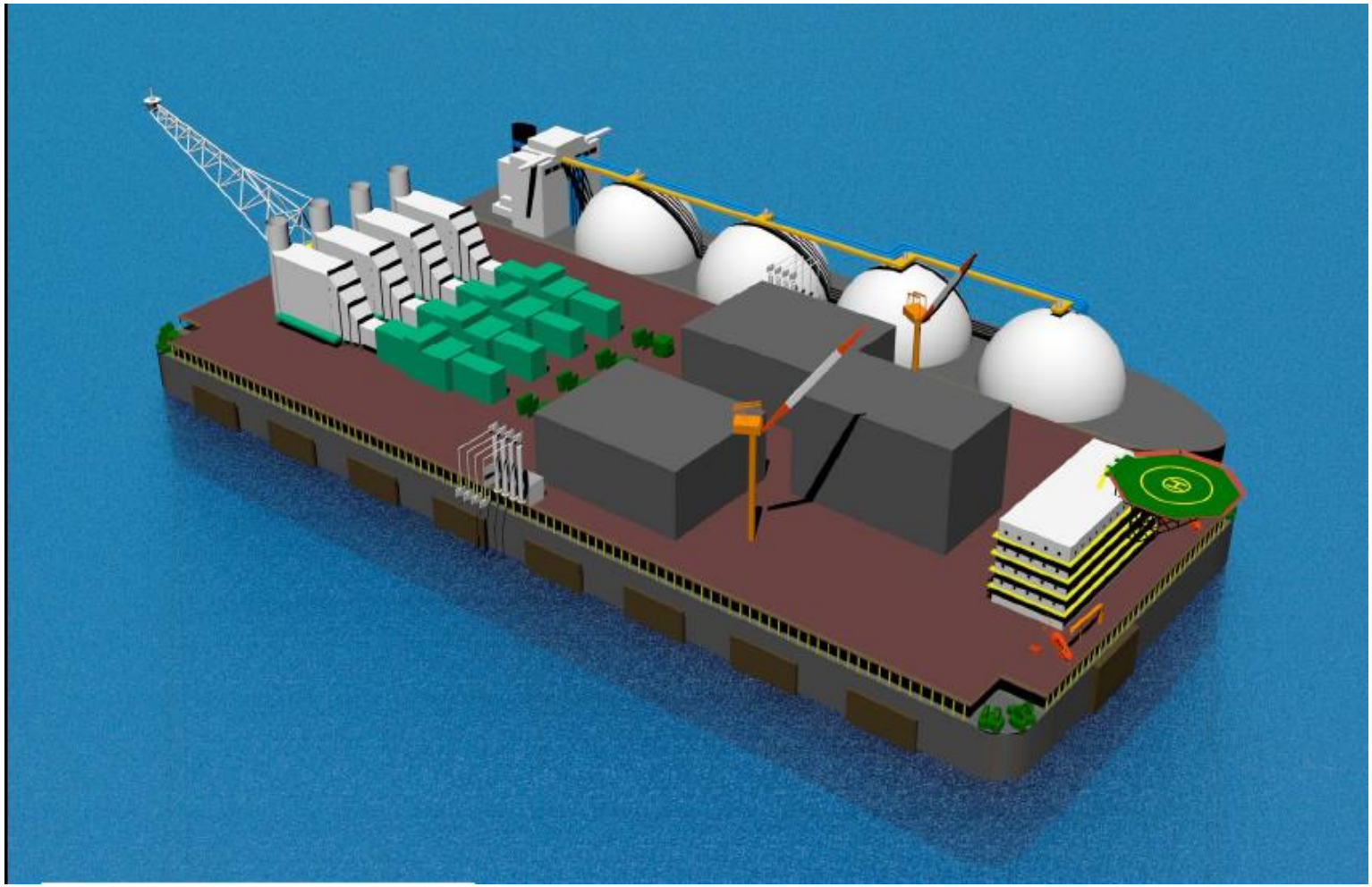

Why a Floating Platform?

- Float Inc's patented Pneumatically Stabilized Platform (PSP) marine technology characteristics reduce wave activity motions and create a calm water zone to leeward thus enhancing docking of LNG tanker offloading as well as refueling LNG vessels in an offshore emplacement.
- LNG Terminal can be built at a remote site from its operating site; subsequently connected to pre-installed moorings, pipe, and grid connections.
- LNG Terminal requires much less construction material than a Ground Bottom Sitting platforms.
- PSP LNG Terminal may be moved to comply with area market conditions changes.
- LNG Terminal is easily decommissioned when its long useful life has terminated, currently estimated at 70+ years.

Float Inc. Preliminary Exposé of its LNG Terminal for EUROPE

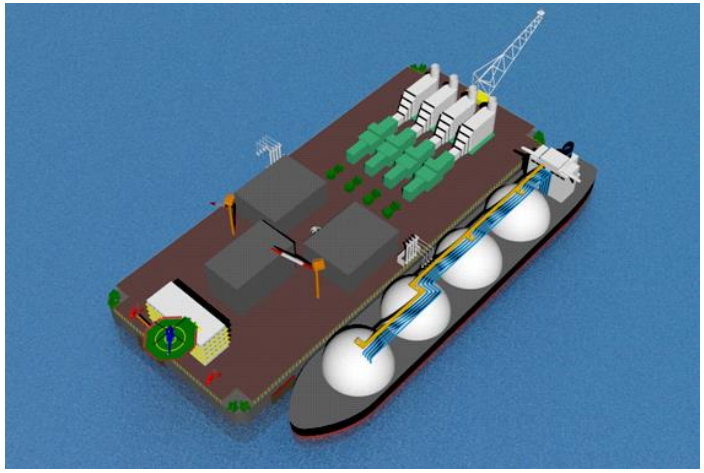

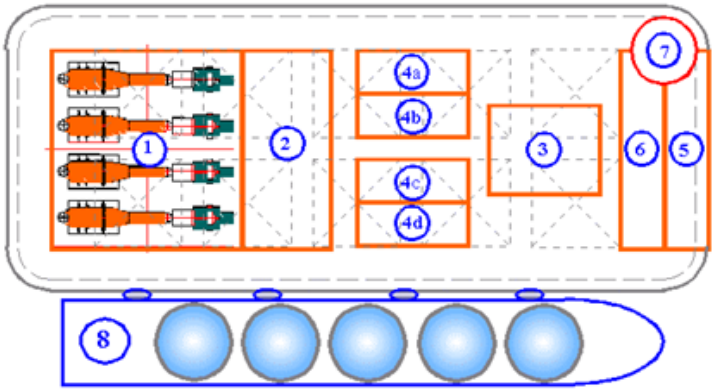

- Delivers natural gas - up to 28 Million cubic meters per day
- Generates base load electric power - up to 1,000 MW (1 million kW)
- Produces potable water - up to 80,000 cubic meters per day
- LNG storage capacity of 400,000 cubic meters (175,000 tonnes)
- Moored safely offshore in deep waters
- Unload docked LNG tankers offshore & refueling of LNG vessels
- Construction in pre-stressed, reinforced concrete
- Construction with local skilled labor and materials

Float Inc. Preliminary Exposé of its LNG Terminal for EUROPE

- LNG Terminal constructed of pre-stressed reinforced concrete
  - 320m L, 130m B, 38.5m H (41,600m²)
  - 4 hectares deck space
  - 550,000 tonnes displacement, fully loaded
  - 400,000 m3 LNG storage in 10 membrane-tanks
- Slow Roll anti-roll, anti-pitch system perimeter
- Pneumatically Stabilized Platform buoyancy, wave de-coupling cylinder structure
- "Spread mooring" with candidate site appropriate anchorage system
- The electricity production of this base load facility, operating at 90% utilization, is:
  - 1.05GW (rating) x 0.9 utilization x 8760 (hrs/yr) = 8,278GWhr/yr.
  - All while delivering:
    - 80,000 cubic meters per day of potable water
    - 28 Million cubic meters per day of natural gas – re-gasification in co-generation
- CO_2 footprint = 30% less than fuel oil

Float Inc. Preliminary Exposé of its LNG Terminal for EUROPE

Float Inc. Preliminary Exposé of its LNG Terminal for EUROPE

LNG Terminal general engineering sketches with storage tank general layout plan

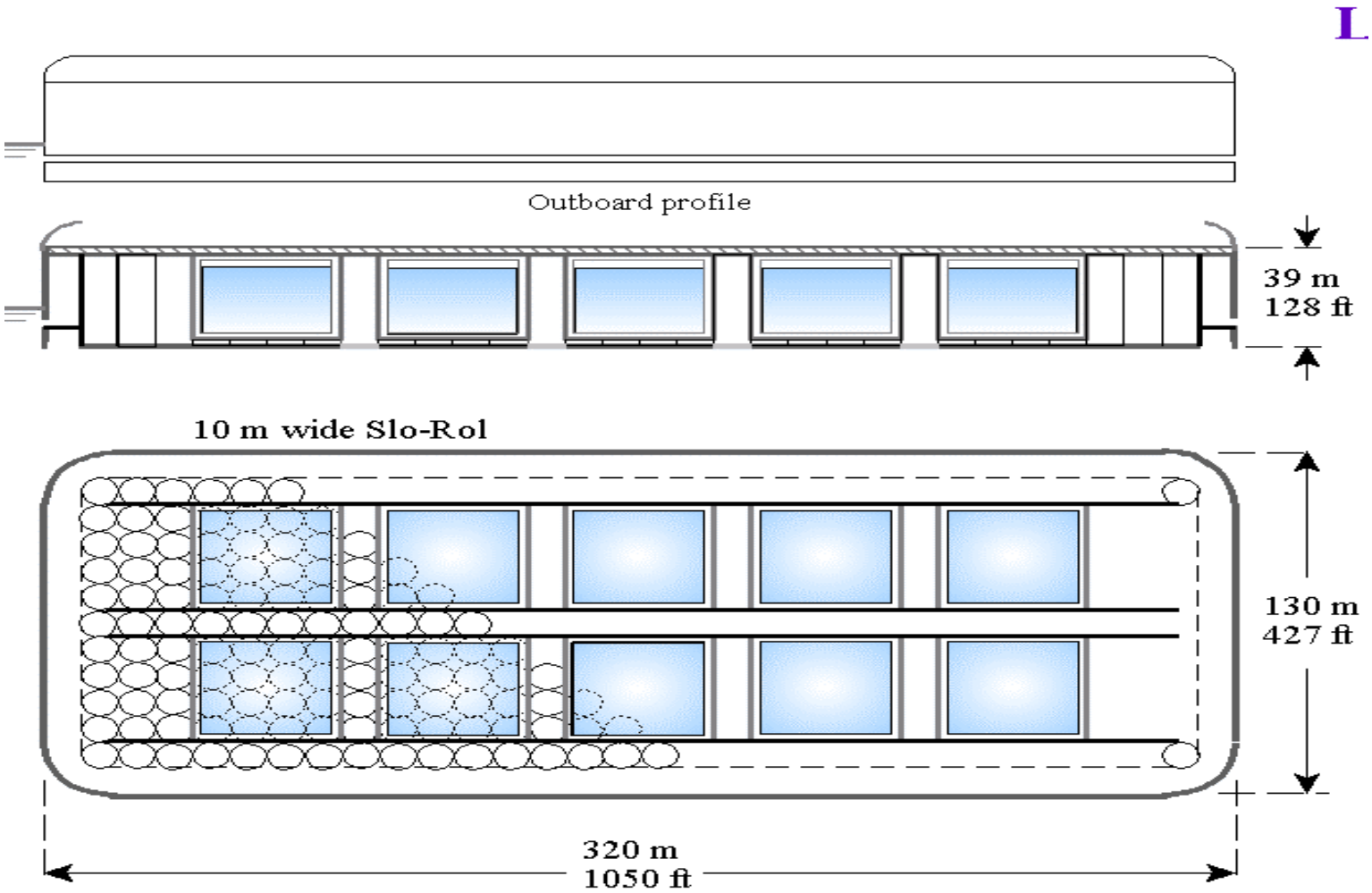

Fresh Water from the sea
Relative heat/energy flows
with water and re-gasification

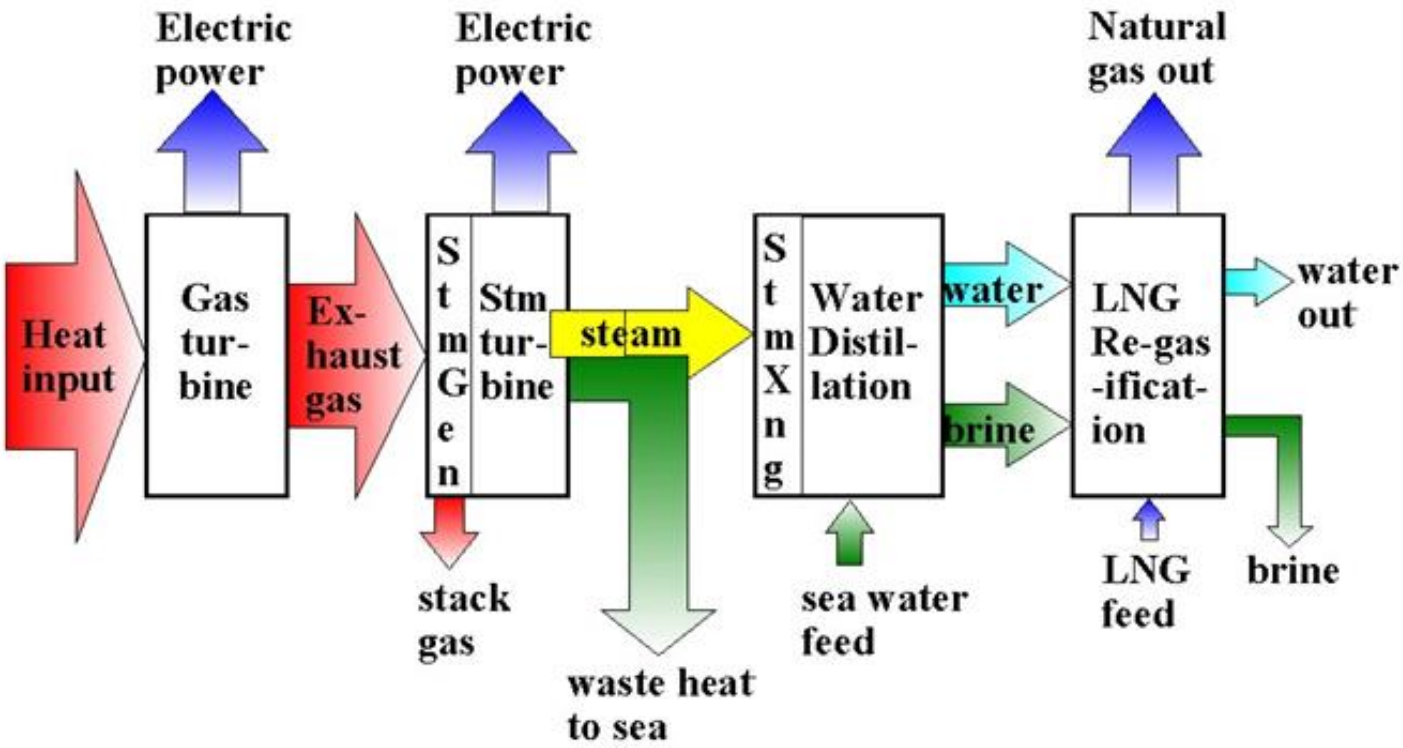

Float Inc Security Port
with
Combined LNG Terminal
& Regasification Power Plant

FLOAT INCORPORATED
Floating Ocean Real Estate