HITACHI
Inspire the Next

Impact of the CO_2 – Scrubber on the Concept and Performance of the Overall Power Plant

EU – Kazakhstan Workshop

30 September 2010, Astana/Kazakhstan

Hitachi Power Europe, Duisburg/Germany

CO_2 – reduction Potential of different Technologies

HITACHI
Inspire the Next

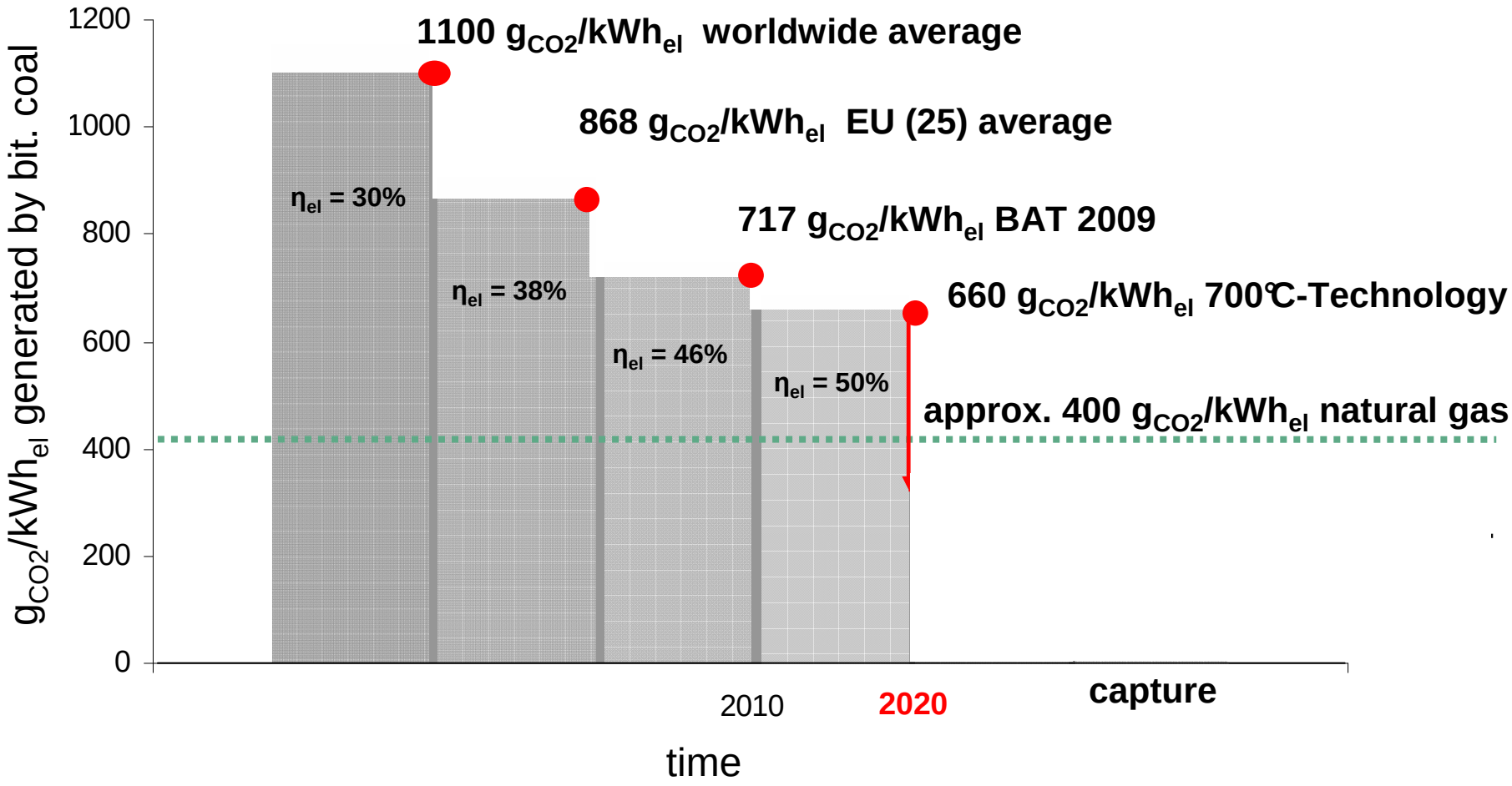

CCS-technologies can reduce CO_2-emissions to a minimum

Technology Status of CO_2 Separation at Power Plant Stations

HITACHI
Inspire the Next

For post combustion capturing of CO_2 the following techniques are available:

Technology
Cryogenic separation
Membrane Technologies
Adsorption
Biological absorption
Chemical absorption

Amine scrubbing systems have been used since the 1930s to remove carbon dioxide (CO_2) and hydrogen sulphide (H_2S) from sour gases at high pressures.

These experiences can be used for the development and design of an amine scrubbing system for coal fired power plant stations.

Hitachi´s Experiences in CO_2 removal from Coal-fired Power Plants

HITACHI
Inspire the Next

Hitachi Pilot Plant
Yokosuka, Japan

Flue Gas Volume: 1000 Nm^3/h
CO_2 removal: 4.5 ton/d
CO_2 Recovery: 90%

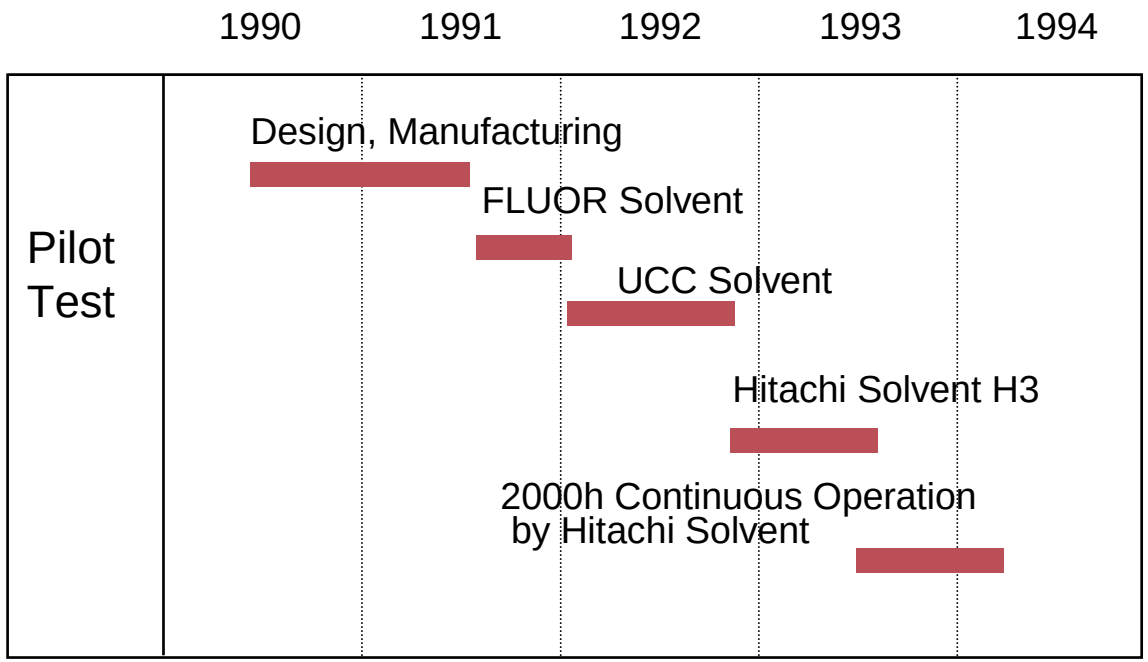

HPE´s mobile Pilot Plant

HITACHI
Inspire the Next

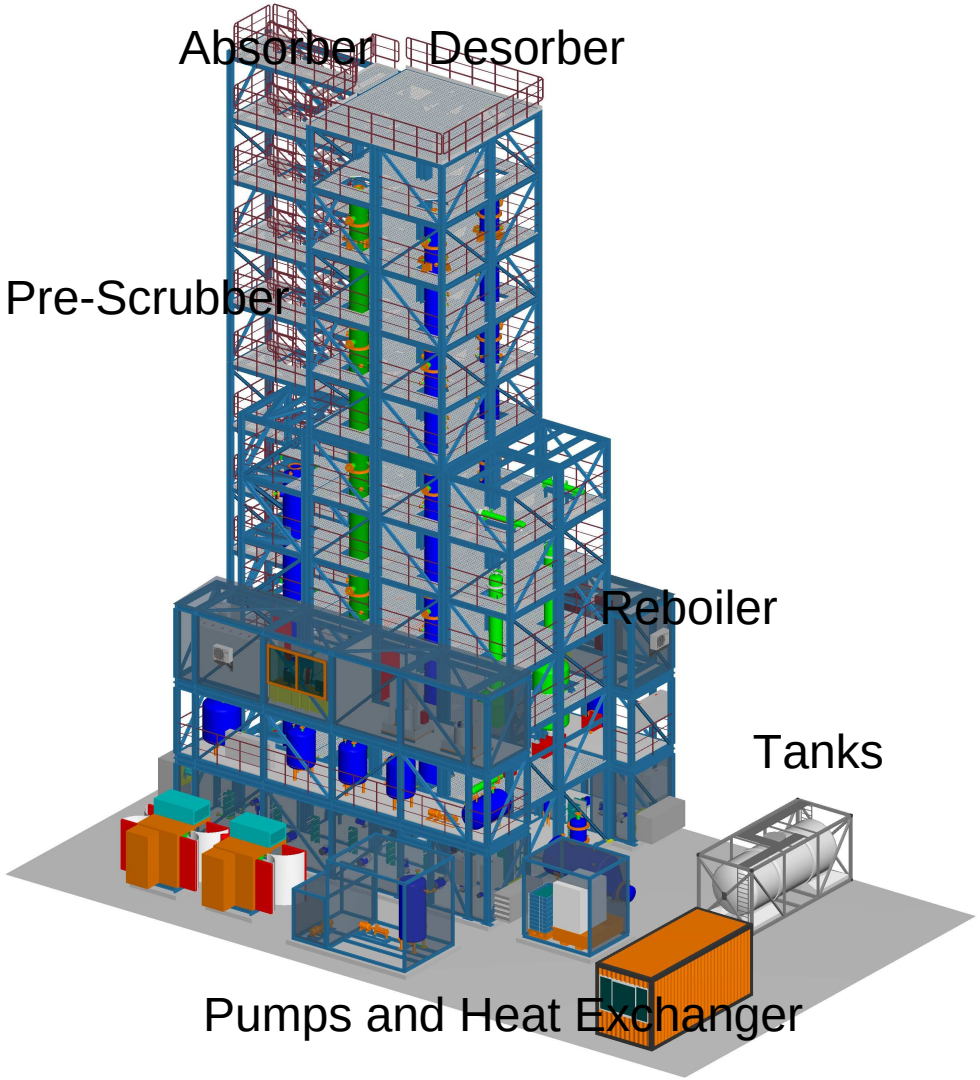

- 5000 Nm^3/h fluegas
- CO_2 removal > 90 %
- removal of 1 ton CO_2/h
- CO_2 purity > 95 %
- Two train design for highest testing flexibility
- Operation on different sites due to installation in containers
- Optimized process design for a reduced energy demand

HPE Pilot Plant Basic Technique

HITACHI
Inspire the Next

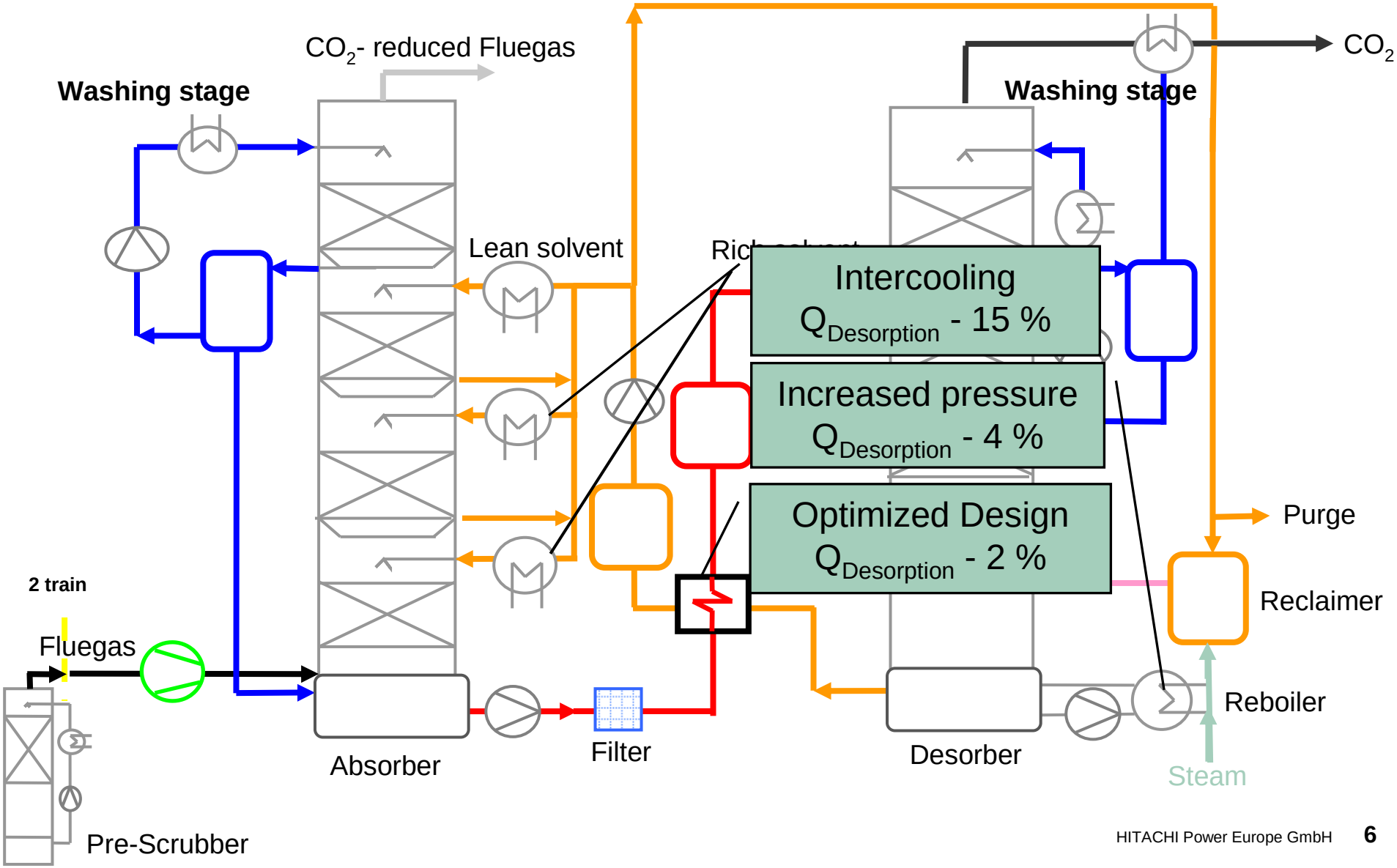

Transportable Design

From Pilot to Full Size Plant

HITACHI
Inspire the Next

Absorber diameter of 12 m is state-of-the art in chemical industry

Pilot Plant

5 MW_{th}

Diameter ~ 1 m

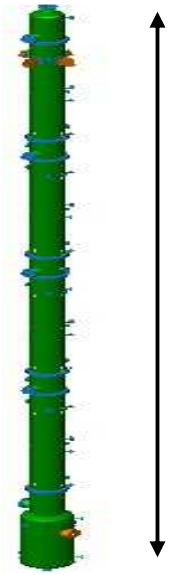

h ~ 23 m

Full scale CO_2 – removal for 800 MW_{el}

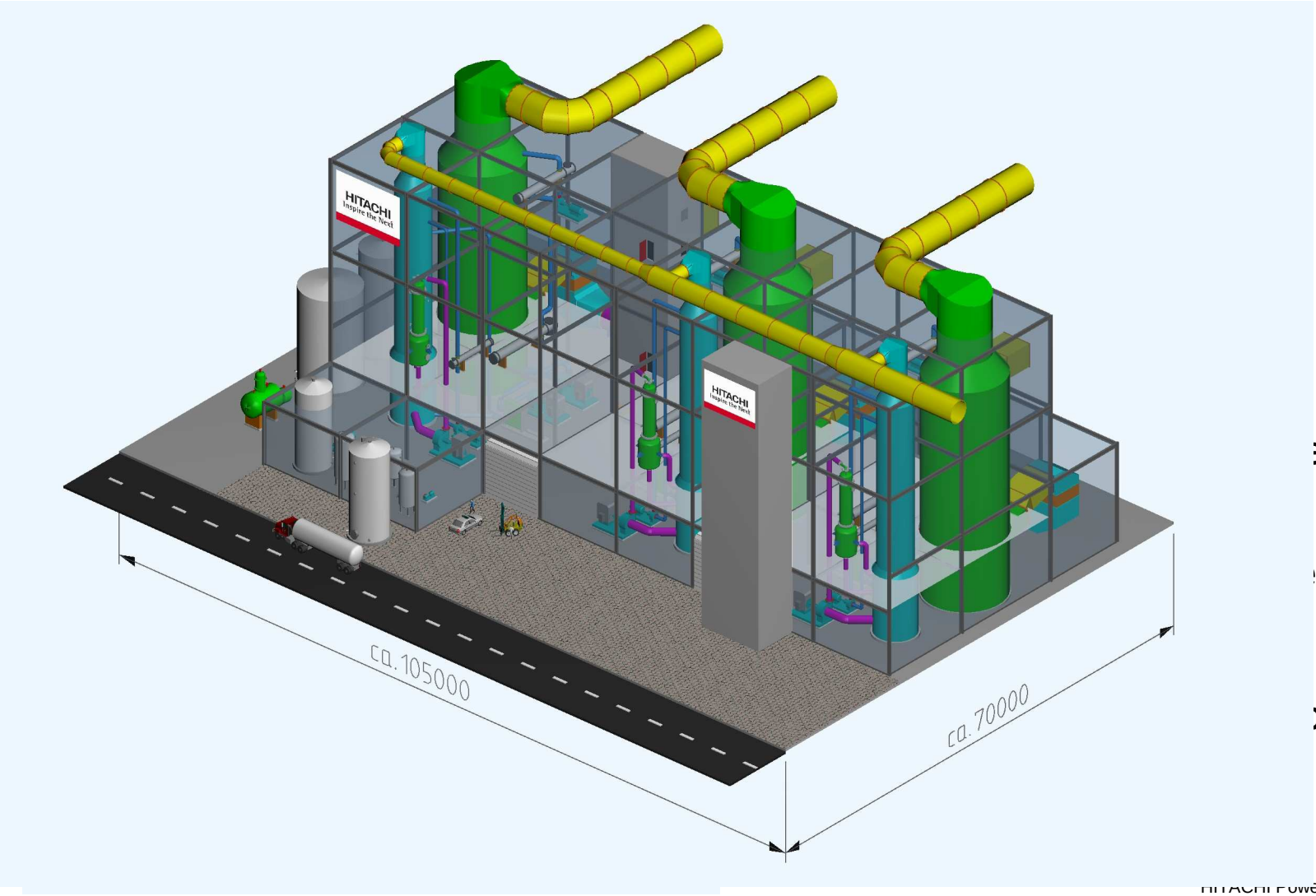

ers

esorber

on area

Integration of Full Size CCS-Plant

HITACHI
Inspire the Next

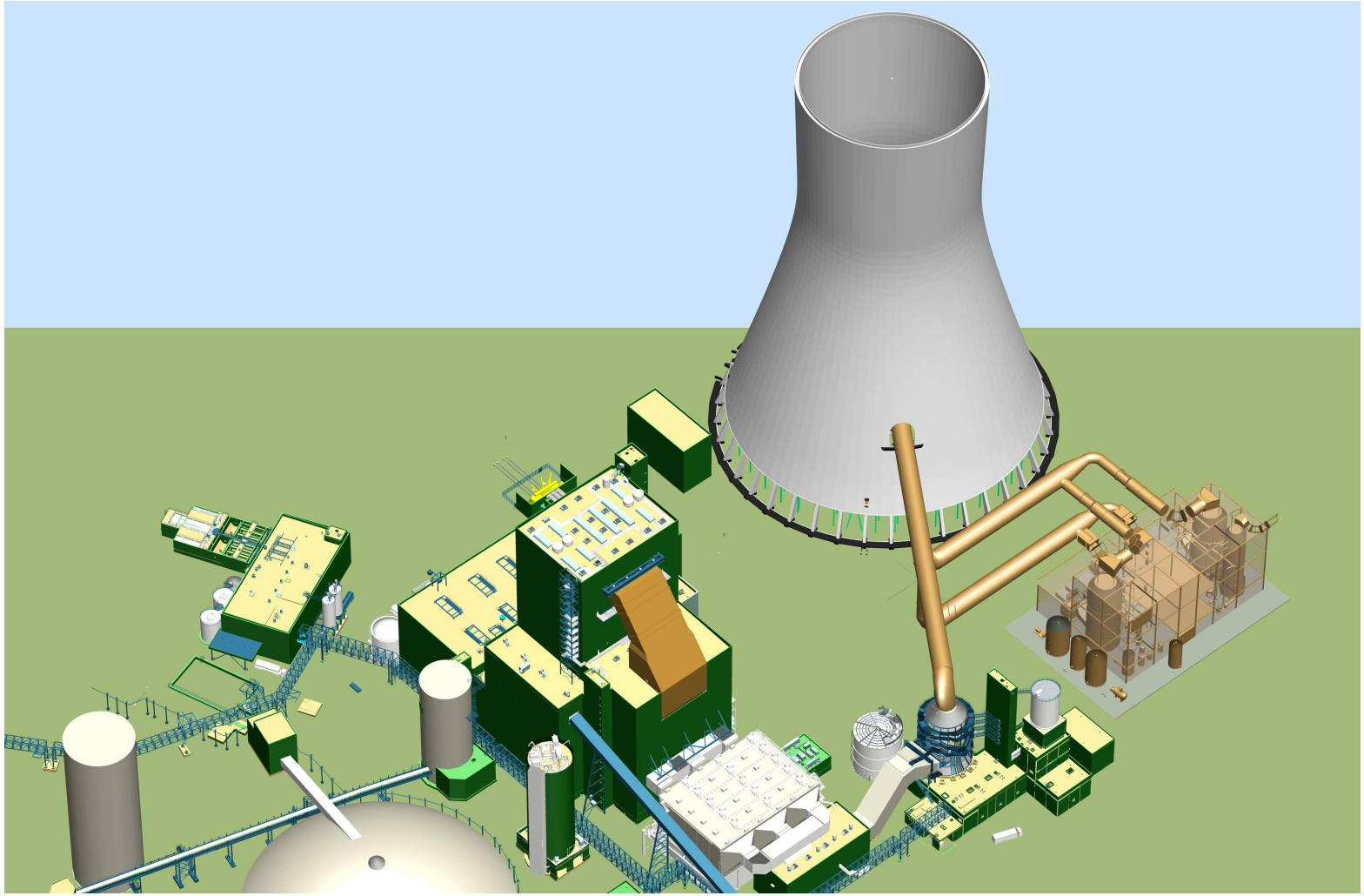

Interfaces of the Post combustion Capturing Plant and the Power Plant

HITACHI
Inspire the Next

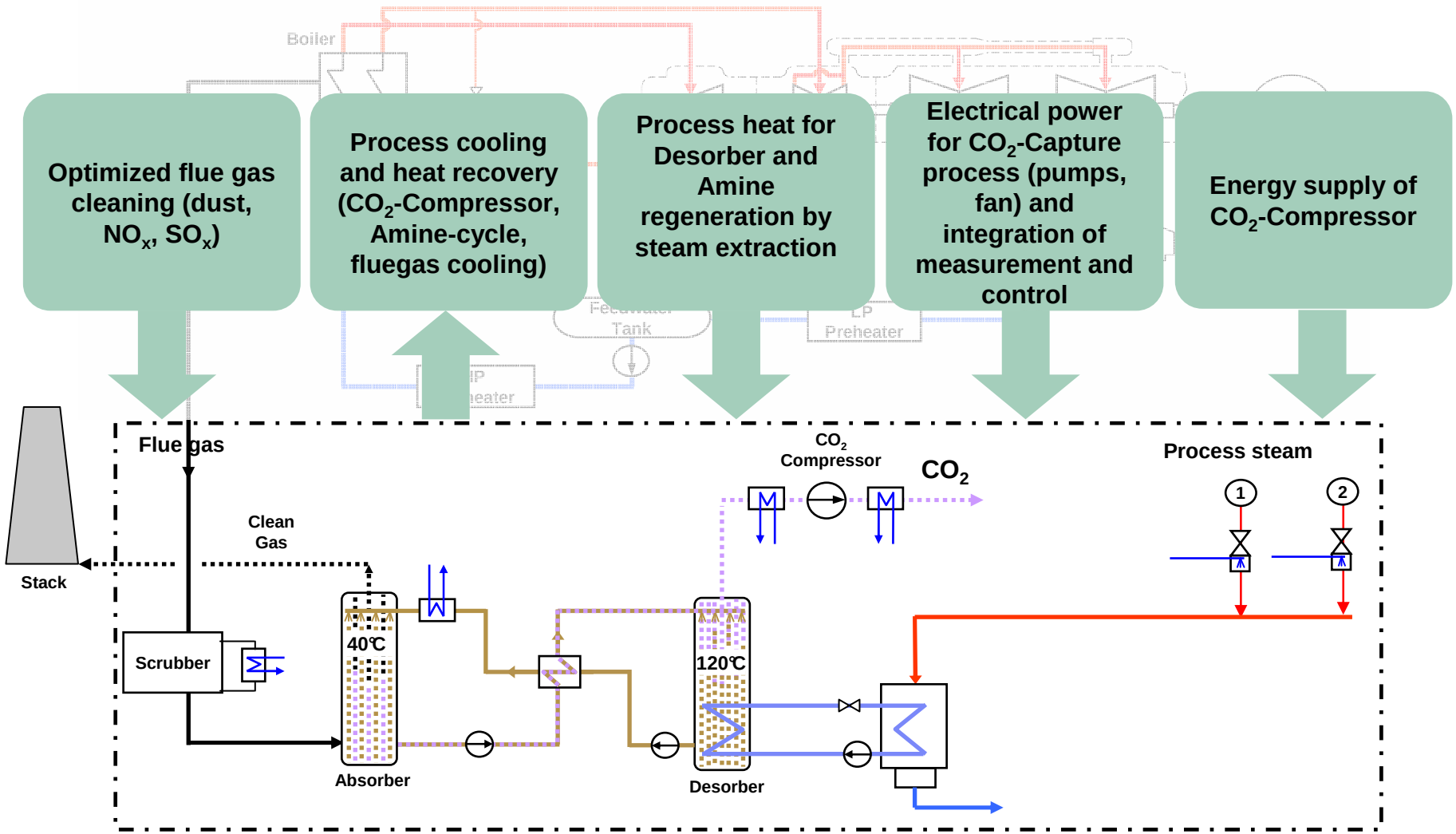

Full Size Plant with Steam Extraction

HITACHI
Inspire the Next

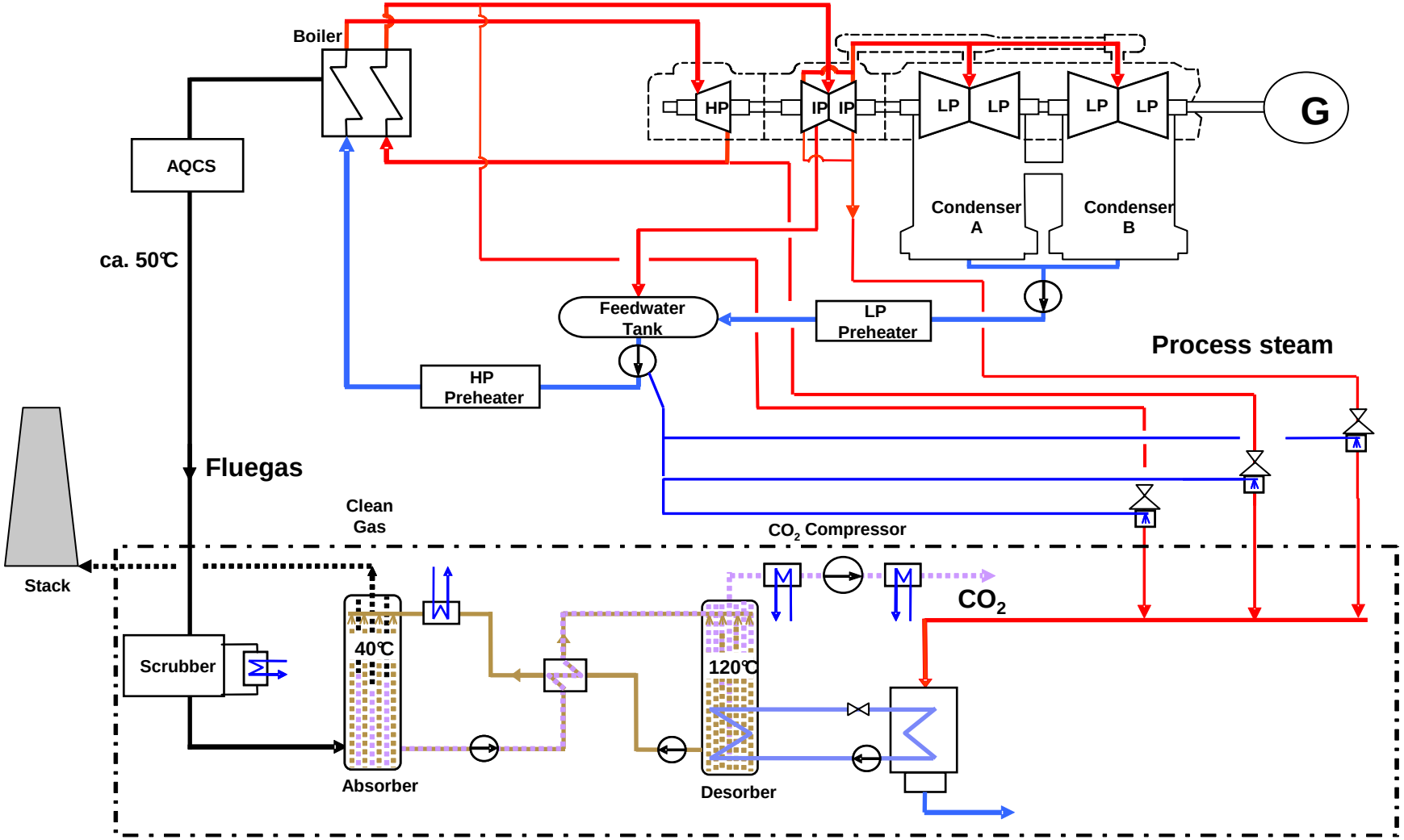

Influences on Plant Efficiency

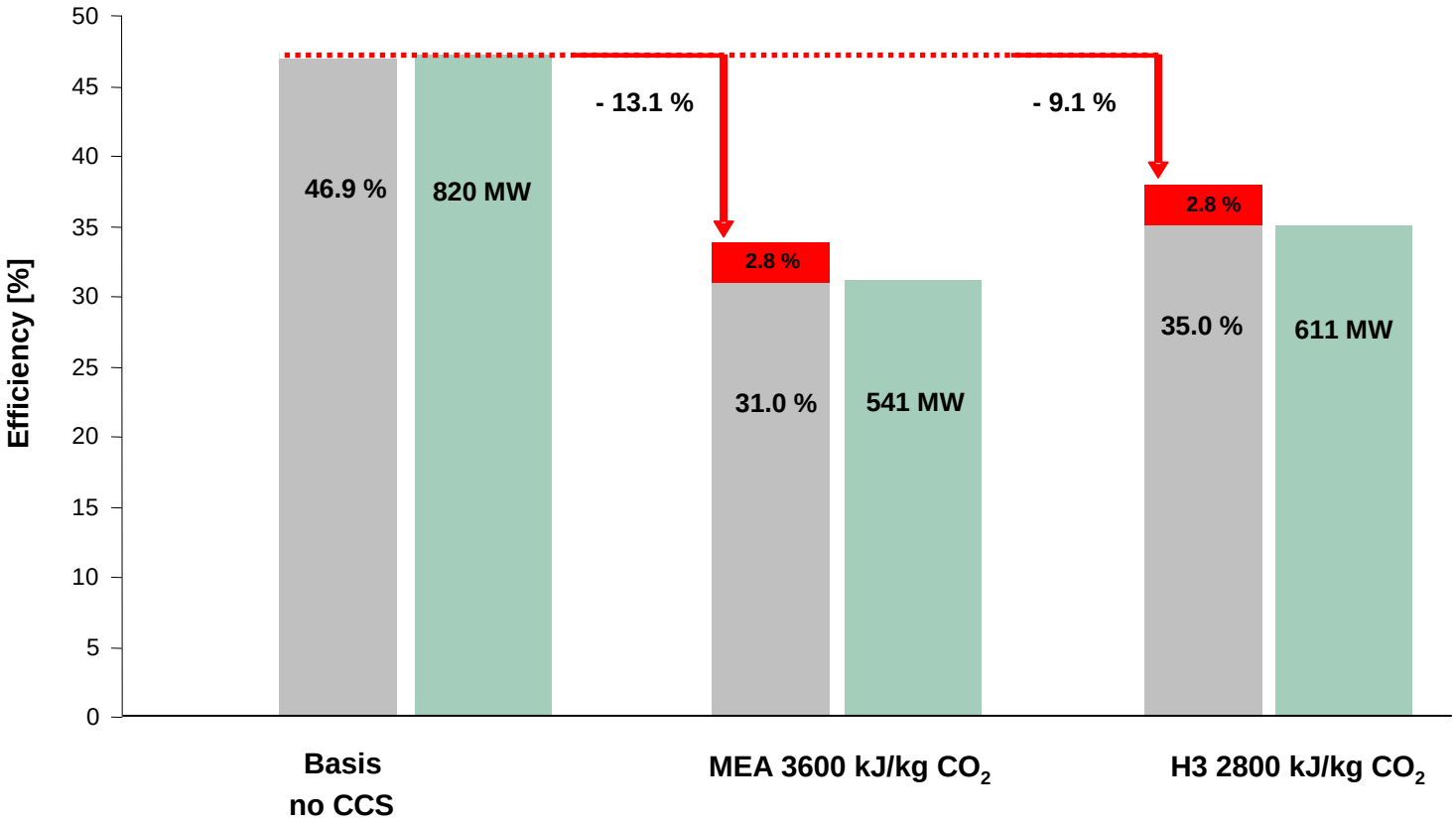

Influences on plant efficiency:

- **Steam extraction from steam turbine for CCS-process**
- **Electrical power for CO_2-compressor**
- **Electrical power for CCS-process (pumps, fans etc.)**

Optimized Integration of CCS

HITACHI
Inspire the Next

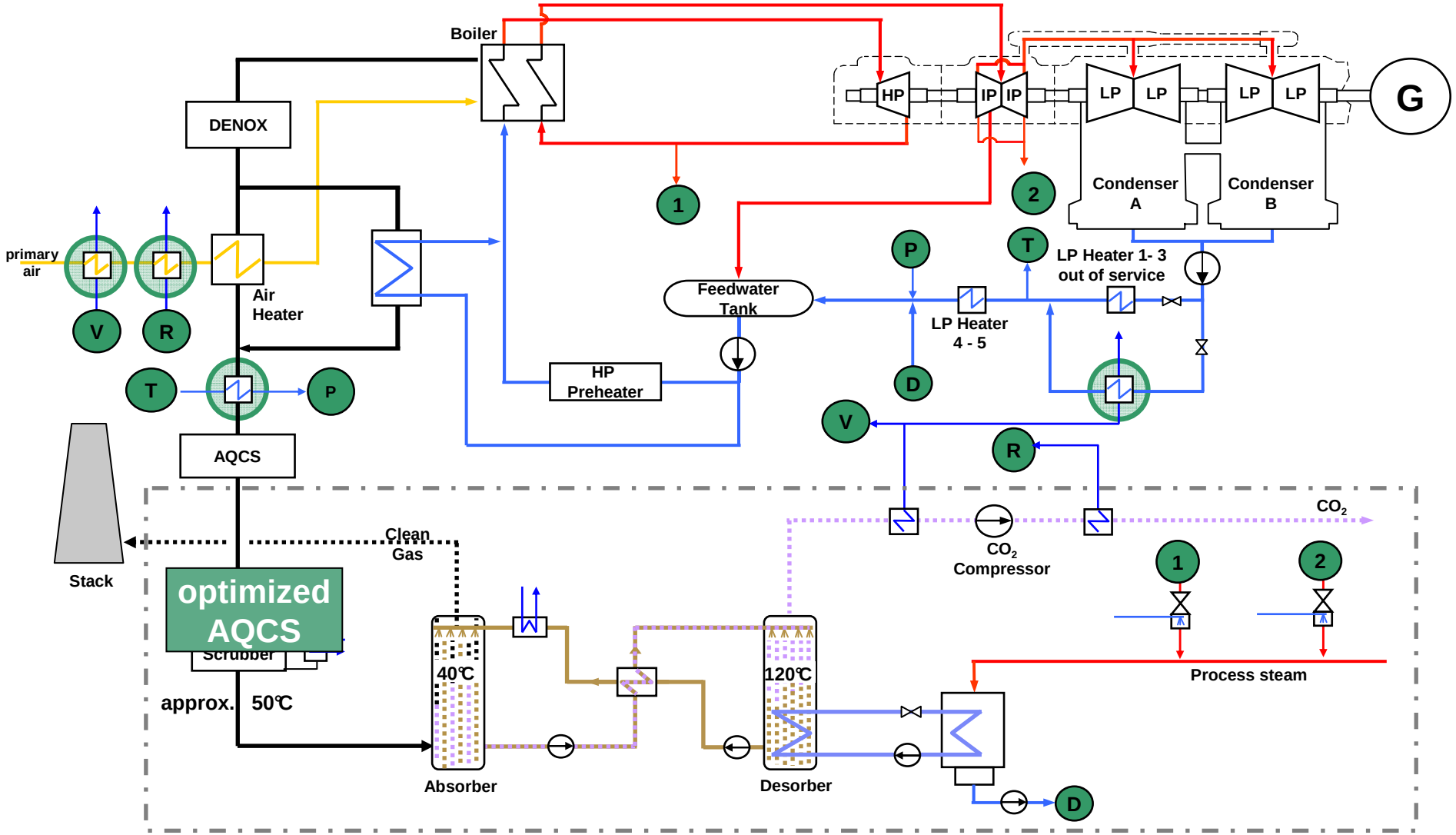

Additional component or flow in water steam cycle for CCS operation

Modifications of the Steam Turbine

HITACHI
Inspire the Next

1. **The last stage blades of the HP- and IP-Turbines must be designed for the increased enthalpy drop, caused by the steam extraction for the CCS-Process**
2. **The casted outer casing of the IP-Turbine must be designed according to the mass flow of the steam extraction for the CCS-Process**
3. **The size of the last stage blades of the LP-Turbine should be designed smaller according the new exhaust steam flow**
4. **Optionally a cross over valve between the IP- and LP-Turbines can be used to reach the required steam pressure for the CCS-Process**

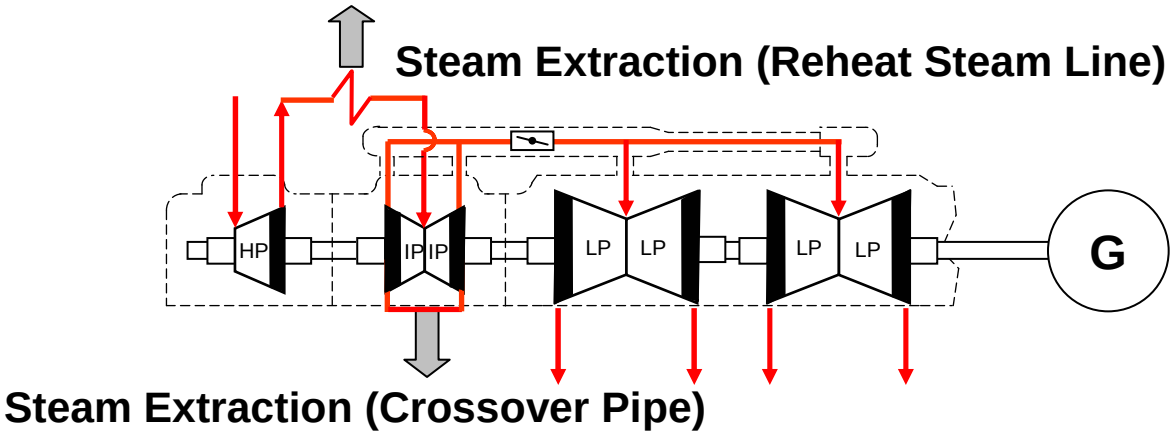

Split of Steam Extraction 800 MW_{el}

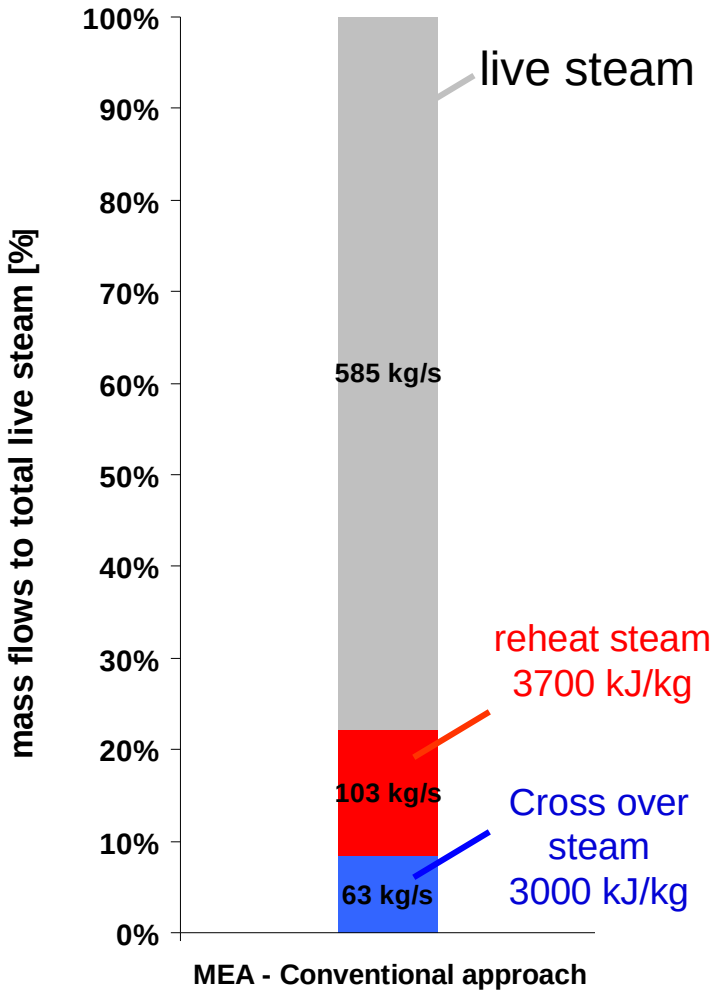

Optimisation of Efficiency

HITACHI
Inspire the Next

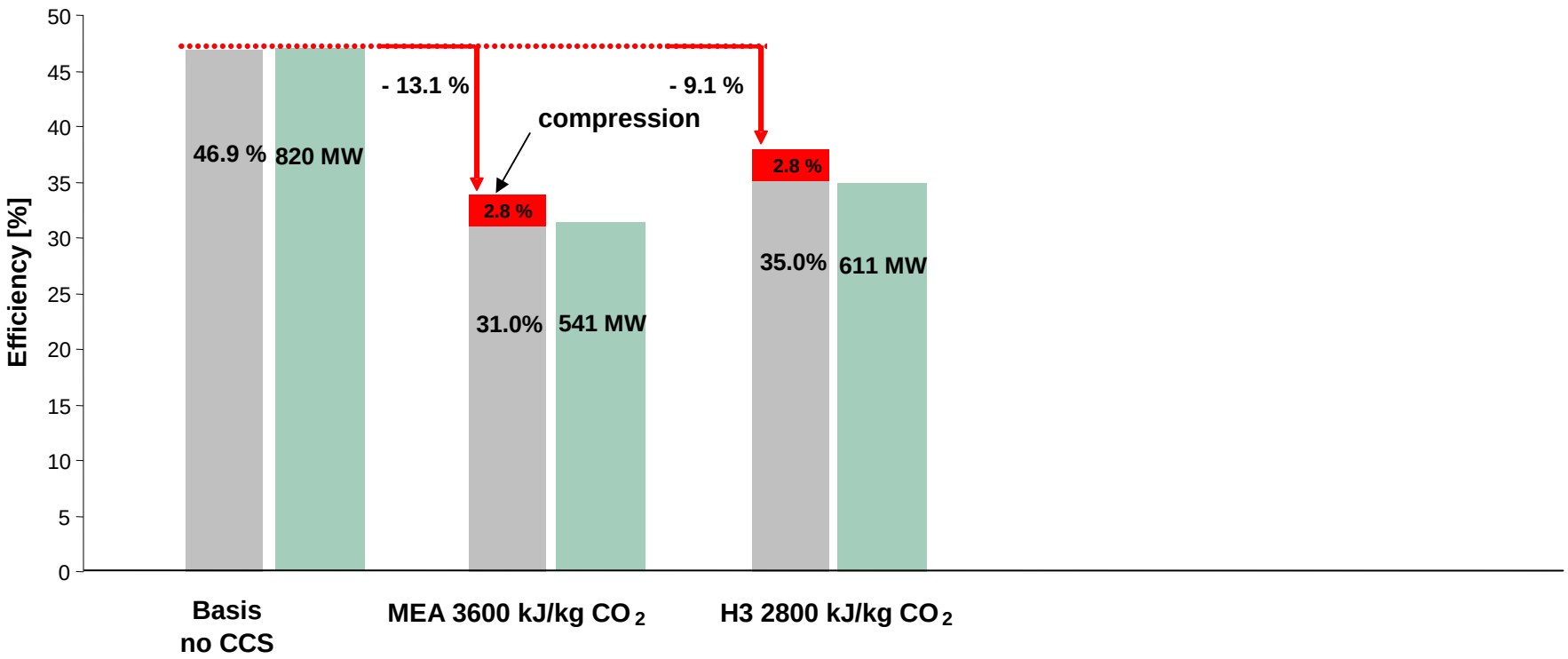

Optimisation of plant efficiency by:

- **Integration of waste heat from CCS - process in LP- and HP- prewarming**
- **Modification of air and flue gas preheating**

Capital Costs for CCS-Plant

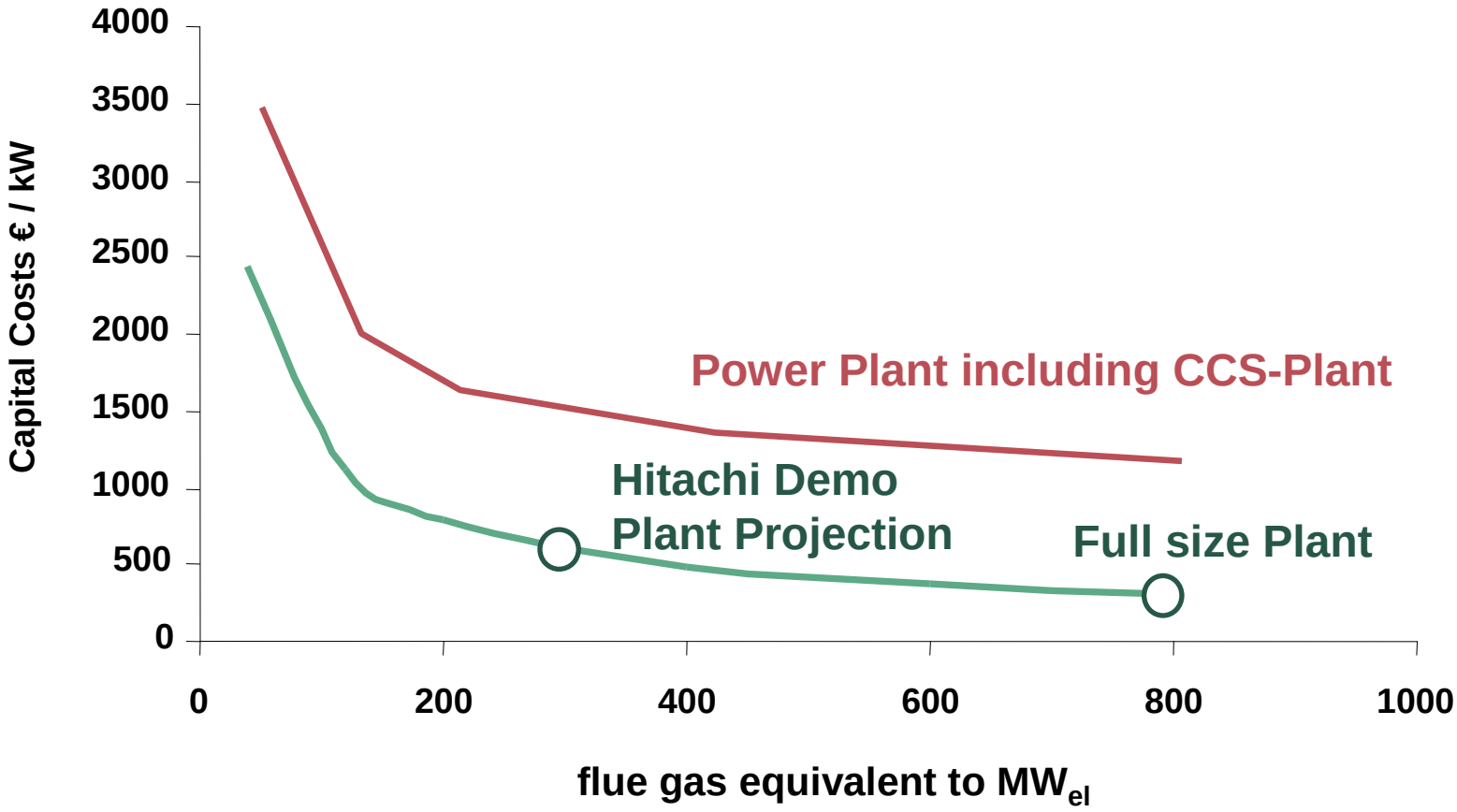

Source: Abu-Zahra et al., „CO_2 capture from power plants“, International Journal of Greenhouse Gas Control, 2007

Facing the Future…

HITACHI
Inspire the Next

1994 • 2007 • 2009 • 2015 • 2020

Pilot Plant tests

Mobile Pilot Plant

FEED Studies

Demo Plants

Full scale Plants
Δ effic. < 7 %

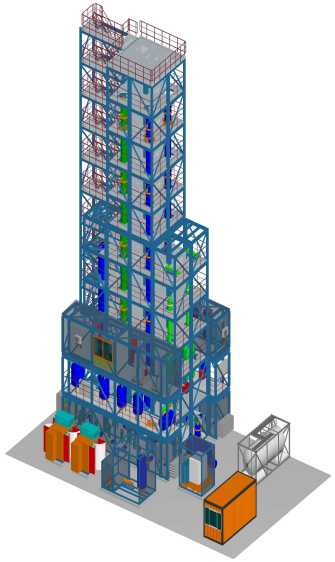

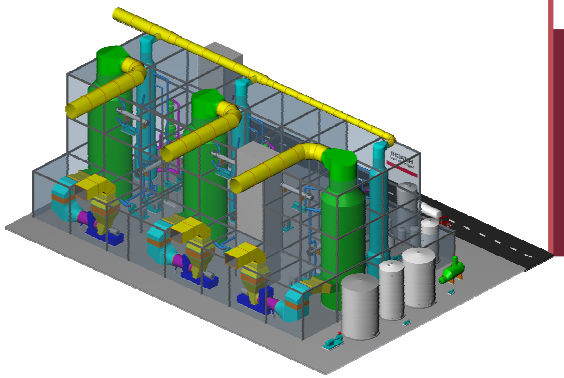

Thank you for your attention!
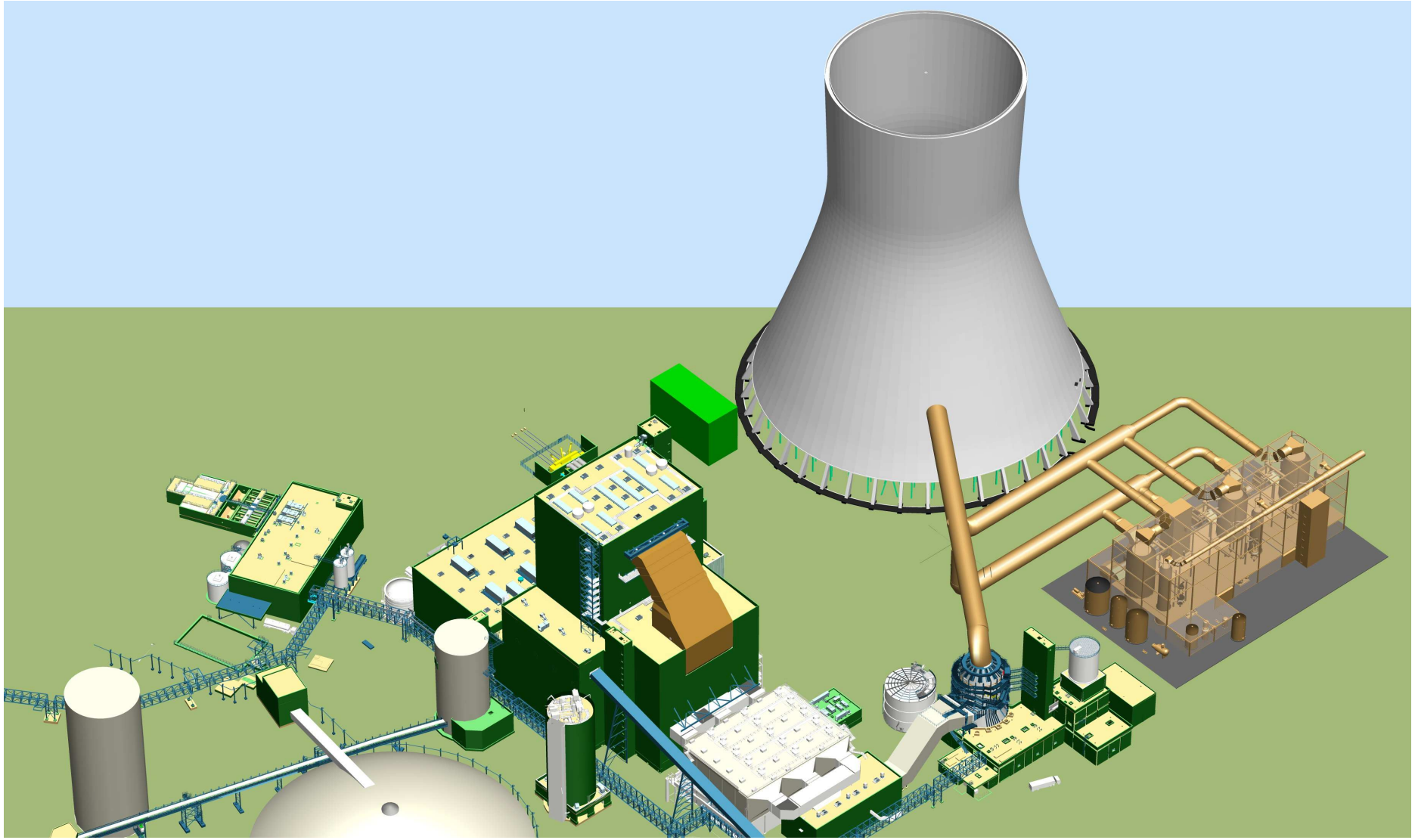
HITACHI
Inspire the Next