HITACHI
Inspire the Next

Modern Concepts for an ultra- supercritical 800 MW Class Coal Fired Powertrain

EU – Kazakhstan Workshop

30 September 2010, Astana/Kazakhstan

Hitachi Power Europe, Duisburg/Germany

800 MW Class Coal Fired Power Train

HITACHI
Inspire the Next

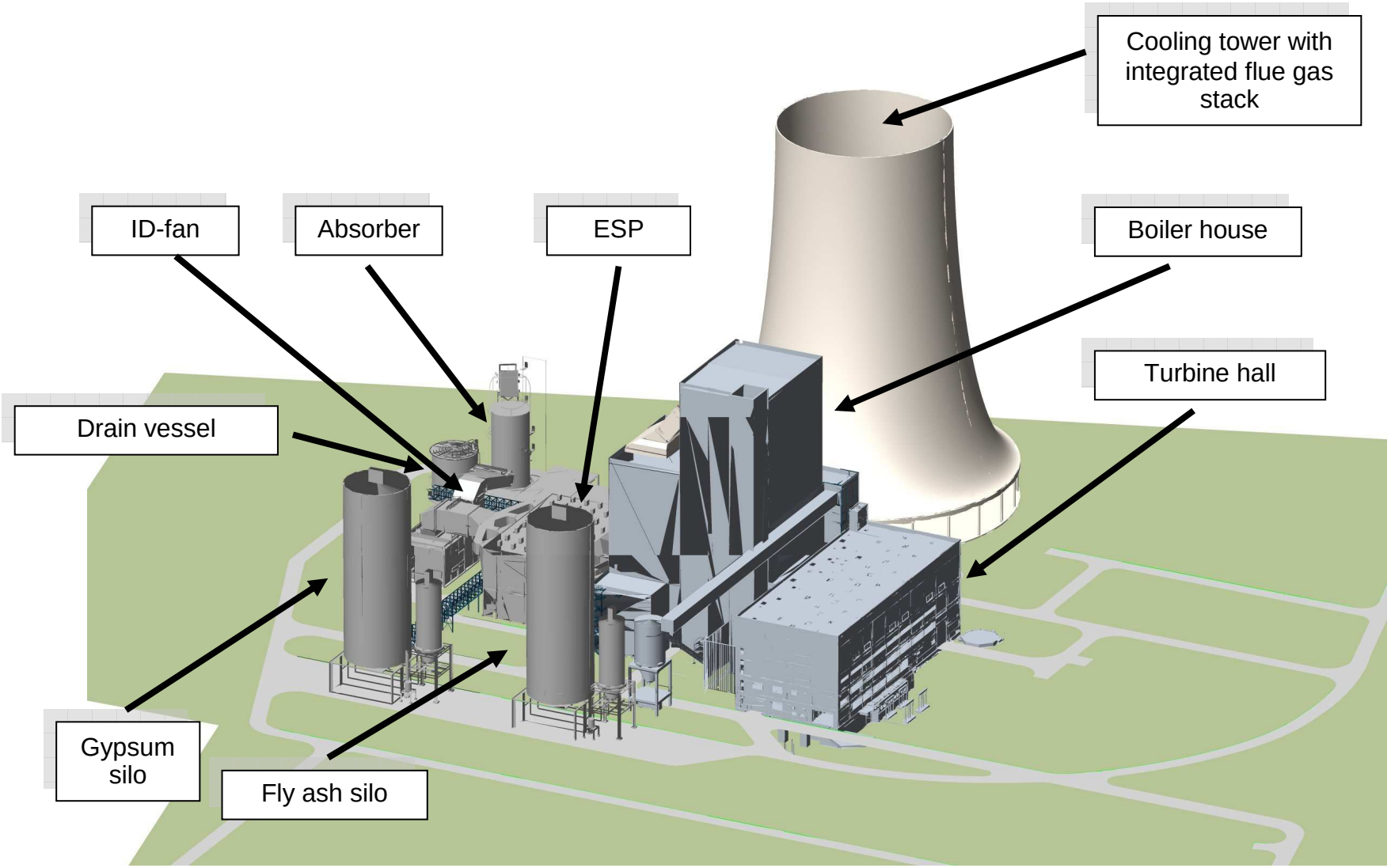

800 MW Class Coal Fired Power Train

HITACHI
Inspire the Next

Typical scope:

- 1 Boiler island
- 1 Air quality control (AQCS) island including ducting
- 1 Steam turbine
- 1 Condenser incl. cleaning devices
- 1 Generator
- BoP Equipment, including:
  - Condensate & feedwater pumps
  - LP- and HP preheaters
  - Condensate polishing plant
  - Feed water vessel and deaerator
  - Piping with fittings, valves, mounting
  - If required: heat extraction system

800 MW Class Coal Fired Power Train

HITACHI
Inspire the Next

Technical key data of the plant:

➢ Gross output at boiler max. capacity rating BMCR (102 % cond.-load):	790 MW
➢ Gross output at max. capacity rating MCR (100 % Kond.-Last):	774,2 MW
➢ Auxiliary power consumption (power train scope)	46,1 MW
➢ Net plant efficiency (power train)	46,6 %
➢ Fuel consumption	1.560,8 MJ/s
➢ Availability for 2 years of operation	90 %

800 MW Class Coal Fired Power Train

HITACHI
Inspire the Next

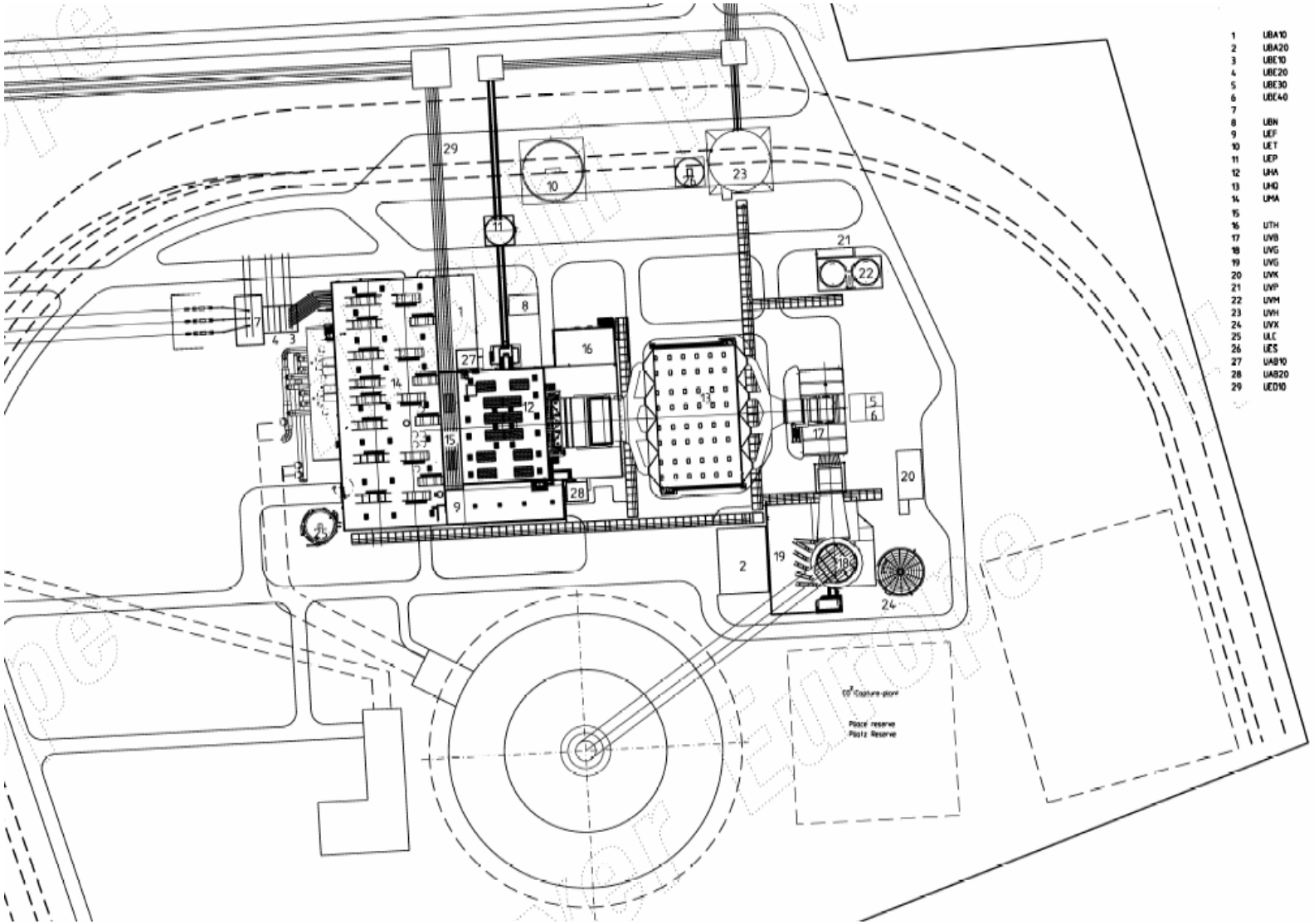

LEGEND

1	UBA10	MAIN ELECTRICAL AUXILIARIES BUILDING (TURBINE/BOILER)
2	UBA20	ELECTRICAL AUXILIARIES BUILDING FOR FGD/ESP
3	UBE10	UNIT AUXILIARY TRANSFORMER
4	UBE20	TRANSFORMER FOR FUTURE CO2 CAPTURE
5	UBE30	SITE ARRANGEMENT / BACK UP TRANSFORMER
6	UBE40	SITE ARRANGEMENT / BACK UP TRANSFORMER
7		STEP-UP TRANSFORMER (THREE PHASE)
8	UBN	EMERGENCY DIESEL
9	UEF	COAL TRANSFER TOWER
10	UET	FLY ASH SILO (DUOCELL)
11	UEP	BOTTOM ASH SILO
12	UHA	BOILER HOUSE
13	UHQ	ELECTROSTATIC PRECIPITATOR
14	UMA	STEAM TURBINE BUILDING
15		MEDIA WING (PART OF BOILER HOUSE)
16	UTH	AUXILIARY STEAM GENERATOR
17	UVB	ID FAN BUILDING
18	UVG	ABSORBER
19	UVG	ABSORBER PUMP HOUSE
20	UVK	LIMESTONE POWDER SILOS
21	UVP	AMMONIA WATER UNLOADING STATION
22	UVM	AMMONIA WATER TANKS
23	UVH	GYPSUM SILO
24	UVX	SLOP TANK
25	ULC	COLD CONDENSATE TANK
26	UES	FLY ASH DAILY TANK
27	UAB10	STAIRCASE 1 (BOILER / TURBINE)
28	UAB20	STAIRCASE 2 (BOILER / SCR)
29	UED10	COAL BELT CONVEYOR

800 MW Class Coal Fired Power Train

HITACHI
Inspire the Next

Boiler key data
(MCR steam extraction 280 t/h)

HP $_{Outlet}$ mass flow	581,5 kg/s
HP $_{Outlet}$ pressure	267,2 bar
HP $_{Outlet}$ temperature	603 °C
Feed water inlet	315,5 °C
Boiler efficiency	94,4 %

RH $_{Inlet}$ mass flow	409 kg/s
RH $_{Inlet}$ pressure	60,8 bar
RH $_{Inlet}$ temperature	371 °C
RH $_{Outlet}$ mass flow	423 kg/s
RH $_{Outlet}$ pressure	58,7 bar
RH $_{Outlet}$ temperature	621 °C

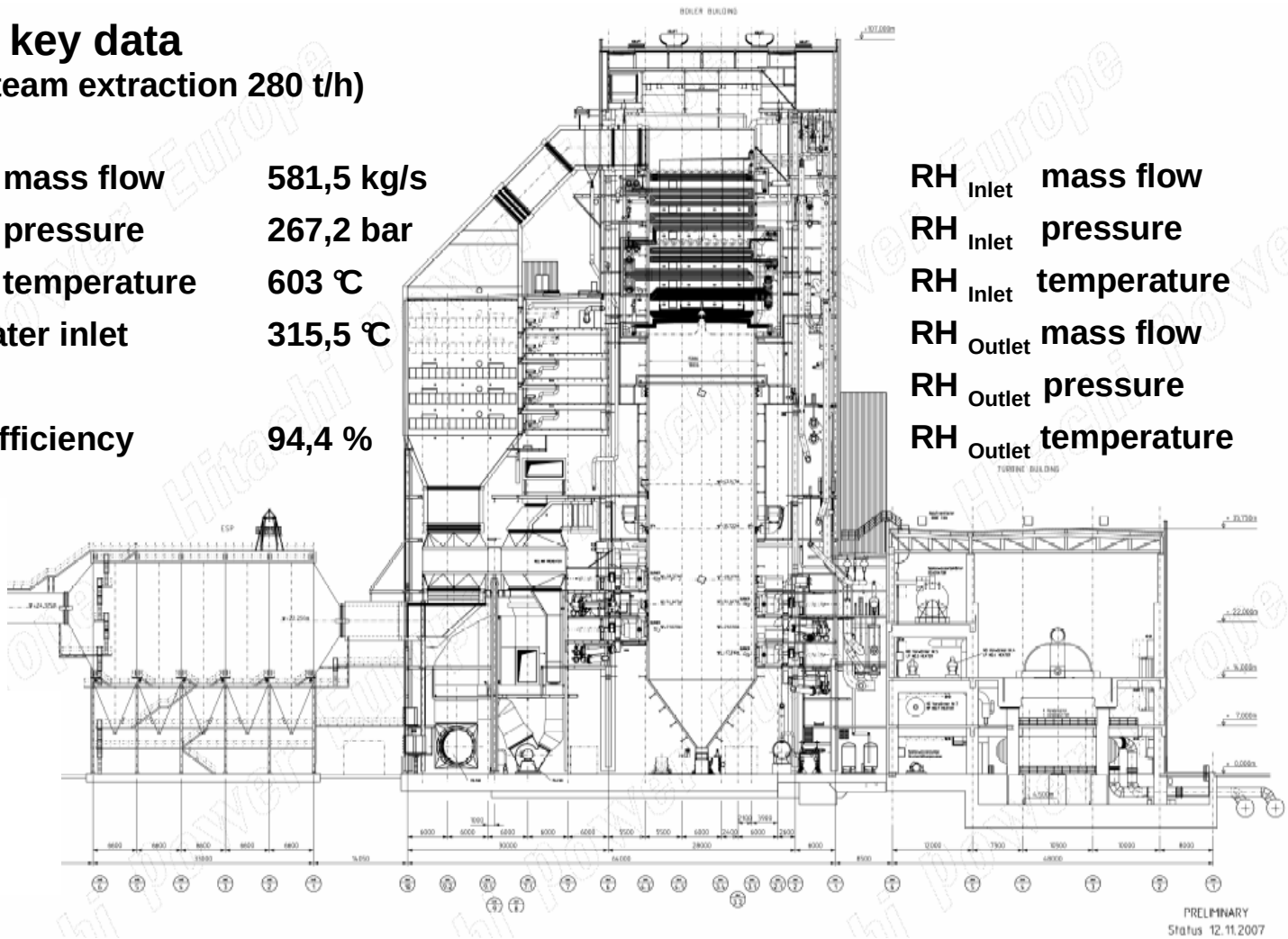

800 MW Class Coal Fired Power Train

HITACHI
Inspire the Next

ESP design for clean gas dust load of 20 mg/Nm³ (dry)

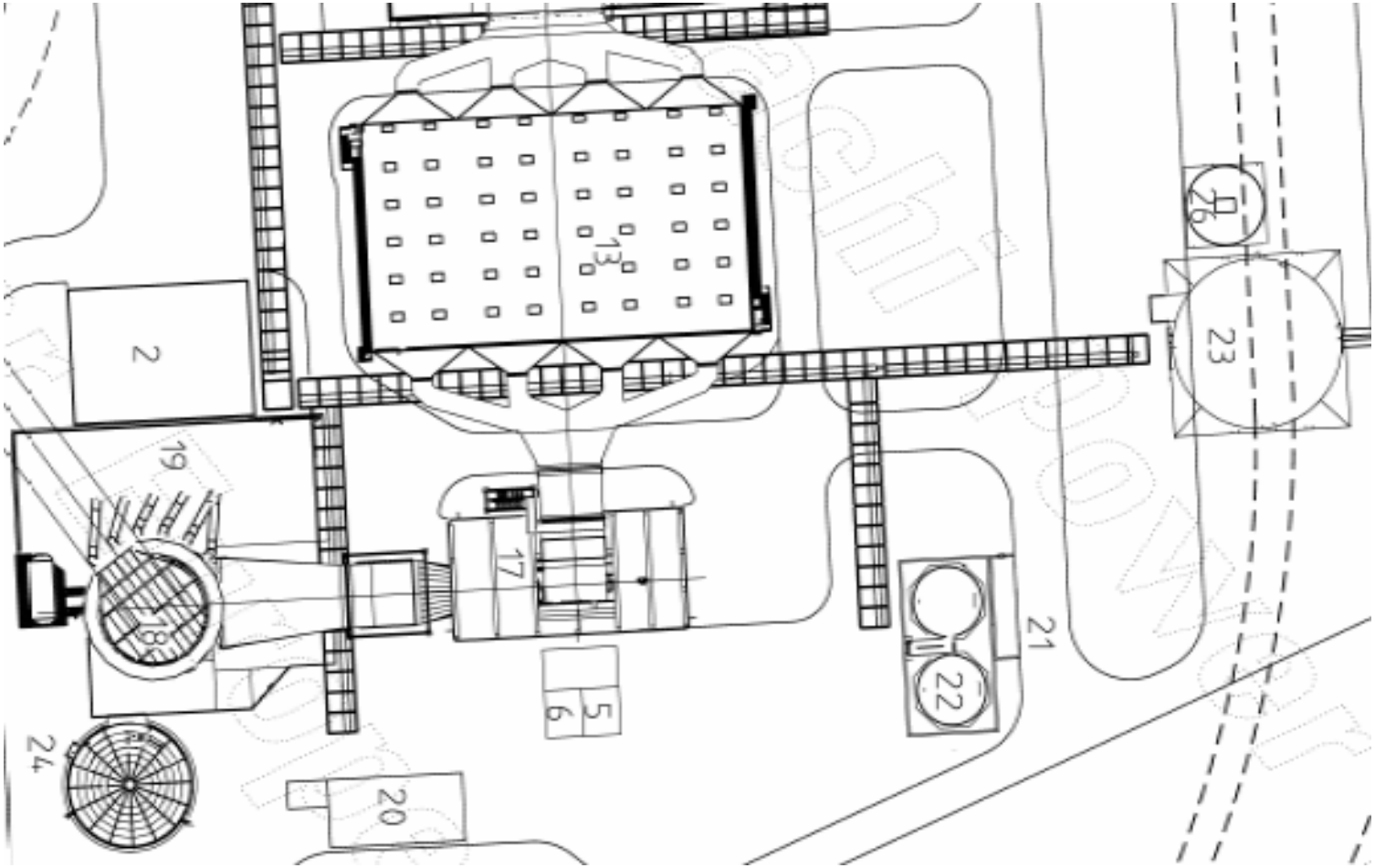

FGD design for 100 mg/m³ SOx @ 6% O_2

800 MW Class Coal Fired Power Train

HITACHI
Inspire the Next

Steam turbine data (TMCR)

Design case	**MW**	**774,2**
Maximum capacity	**MW**	**790**
Thermal efficiency	**%**	**52,2**

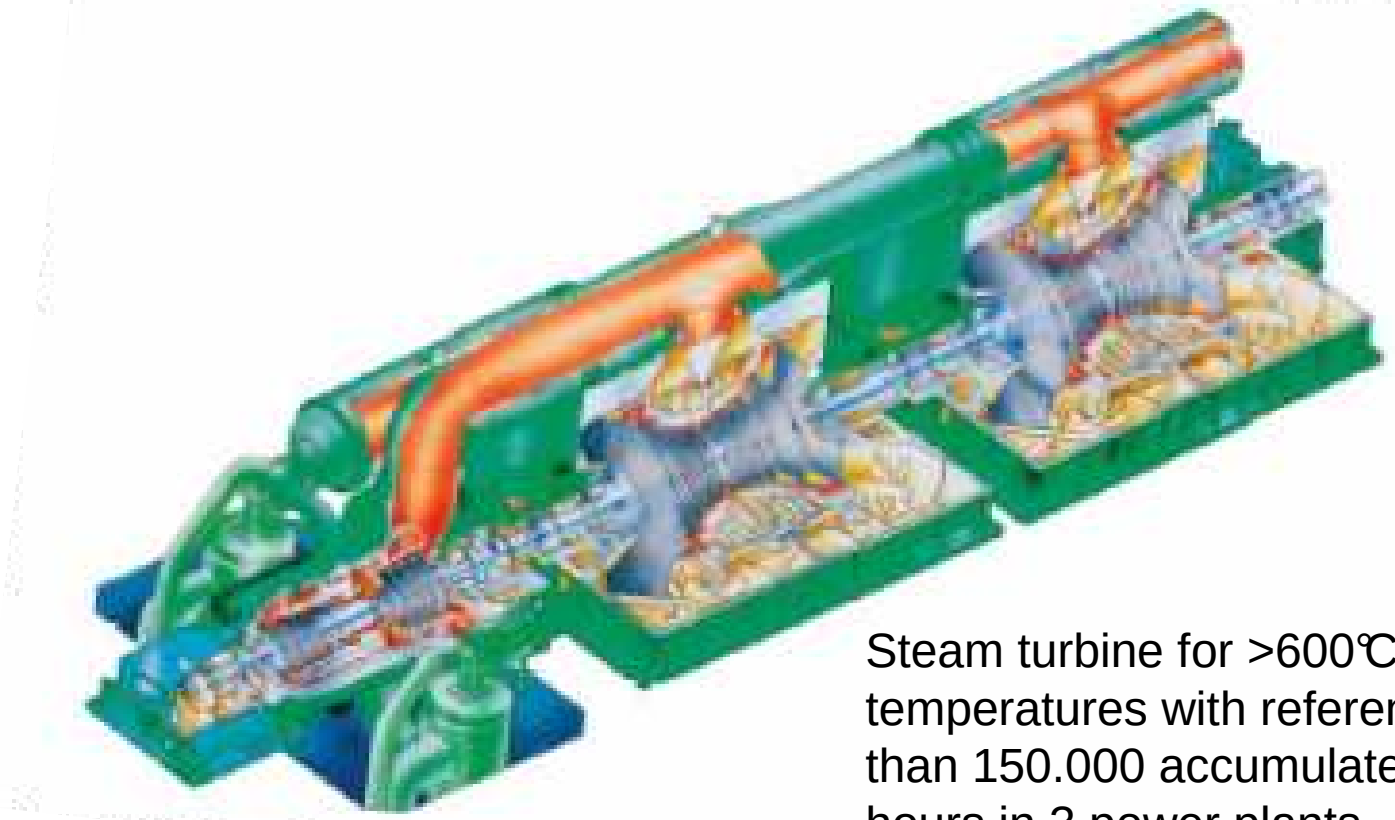

Steam turbine for >600℃ steam temperatures with reference of more than 150.000 accumulated operating hours in 3 power plants

800 MW Class Coal Fired Power Train

HITACHI
Inspire the Next

Generator Data:	**Capacity**	**MVA**	**962 (before exciter power)**
	Cos phi		**0,825**
	Voltage level	**kV**	**21**
	Frequency	**Hz**	**50**

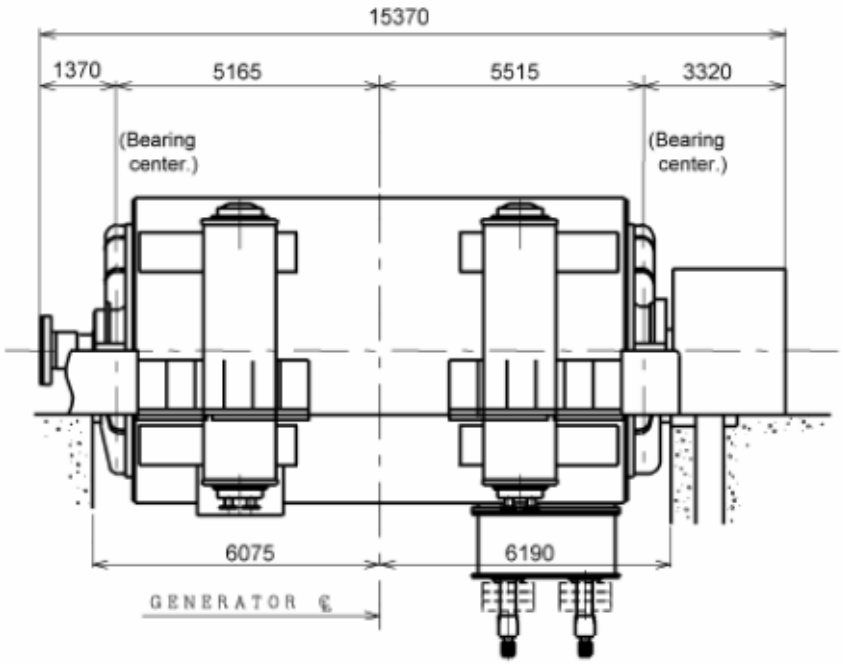

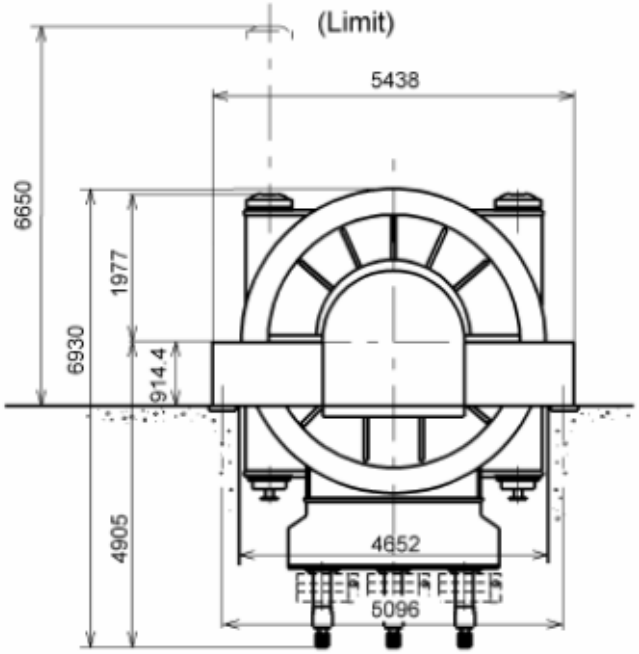

800 MW Class Coal Fired Power Train

HITACHI
Inspire the Next

Terminal Point Diagram Water – Steam - Condensate

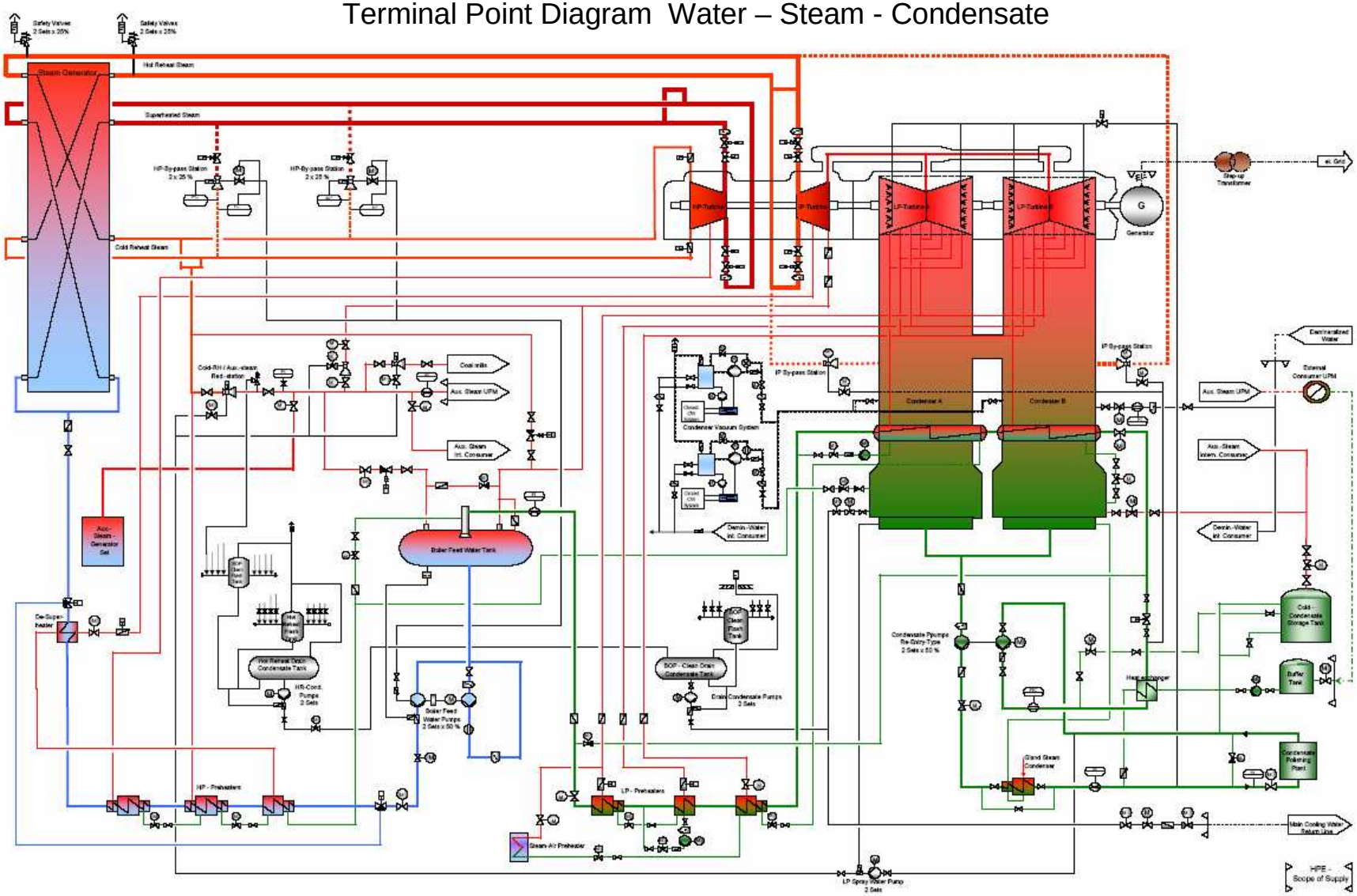

800 MW Class Coal Fired Power Train

HITACHI
Inspire the Next

Terminal Points Fuel – Ash – Air and Flue gas

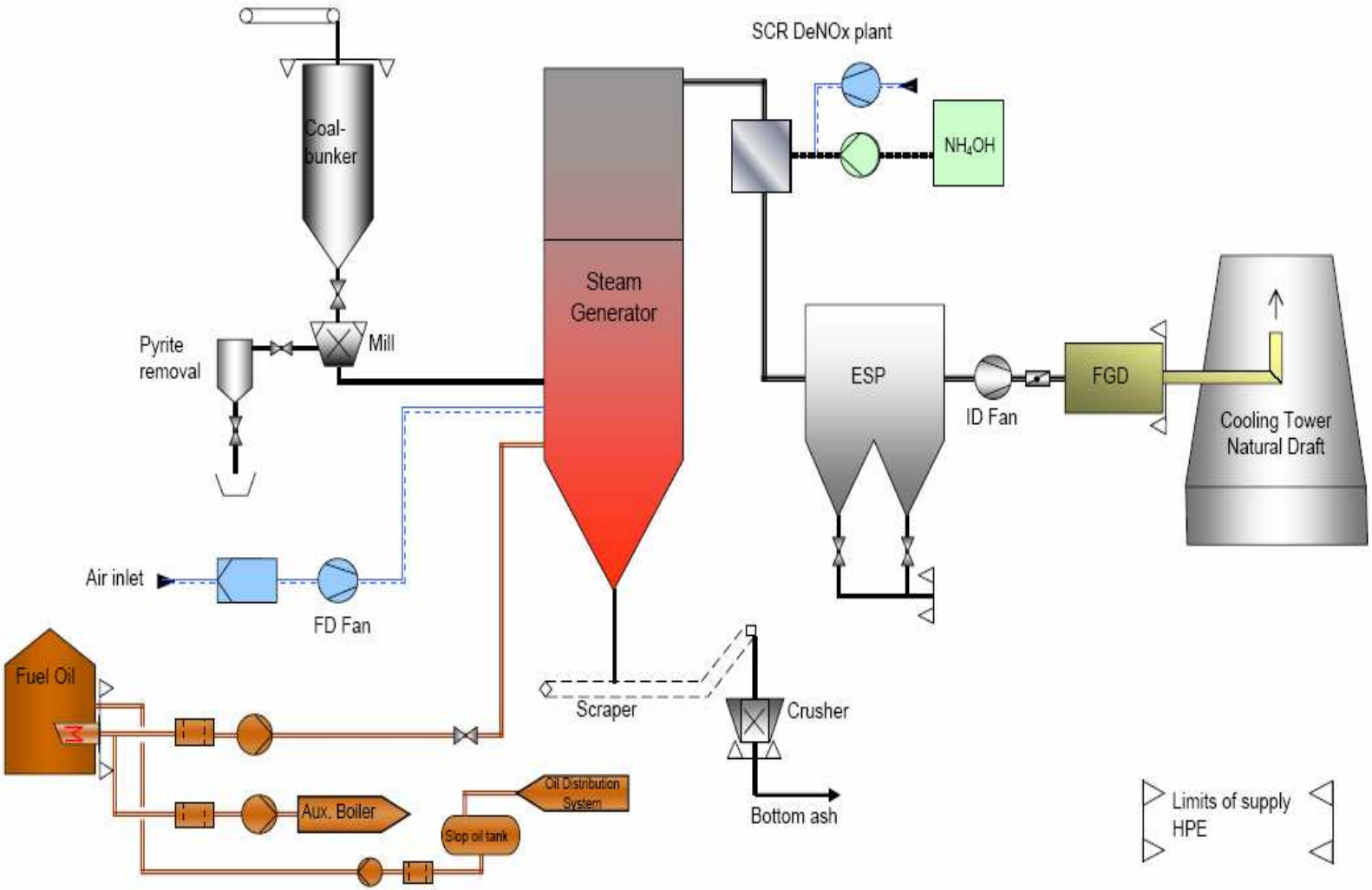

800 MW Class Coal Fired Power Train

HITACHI
Inspire the Next

Terminal points main-, auxiliary- and closed cooling water system

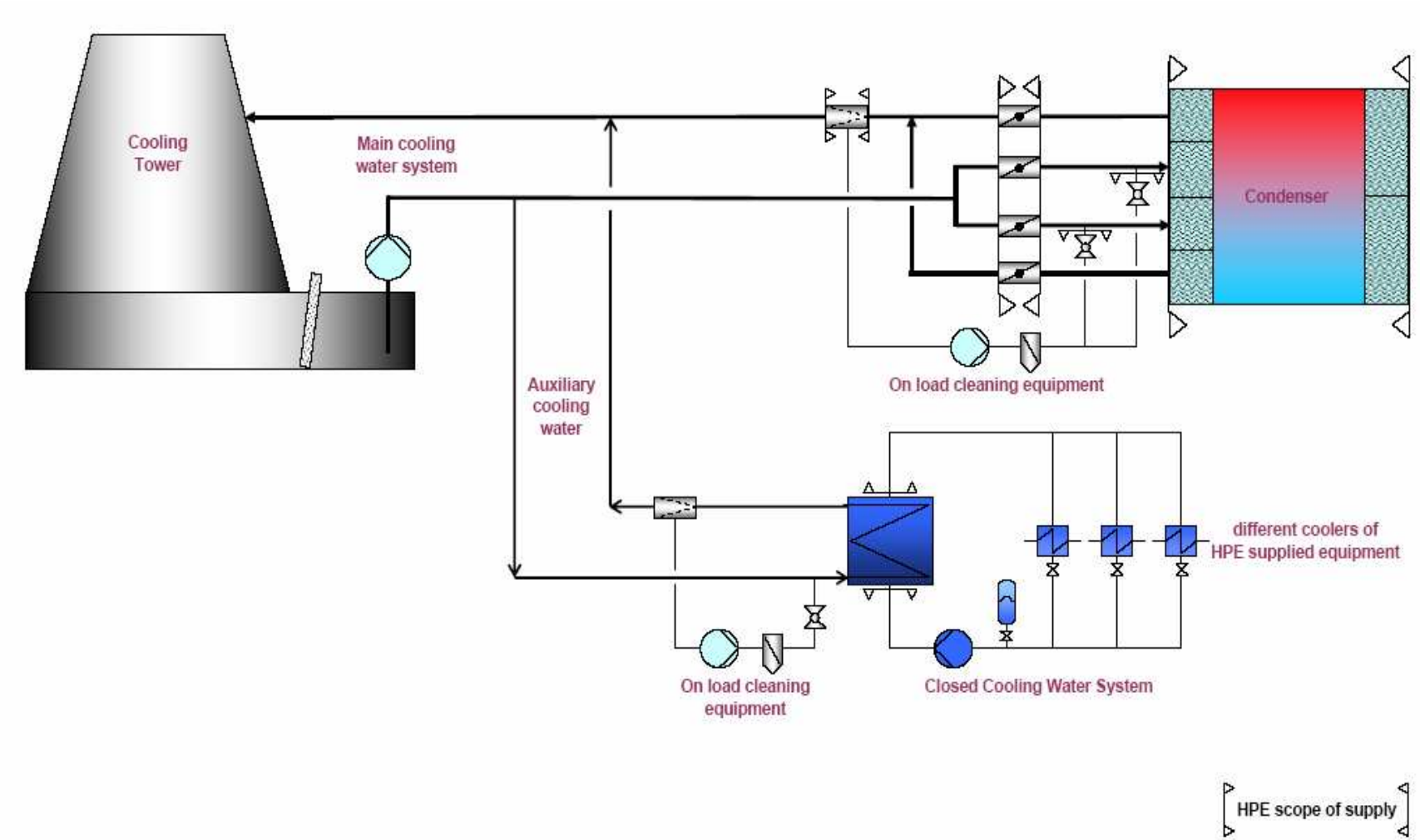

800 MW Class Coal Fired Power Train

HITACHI
Inspire the Next

Terminal Points Main Electrical Components

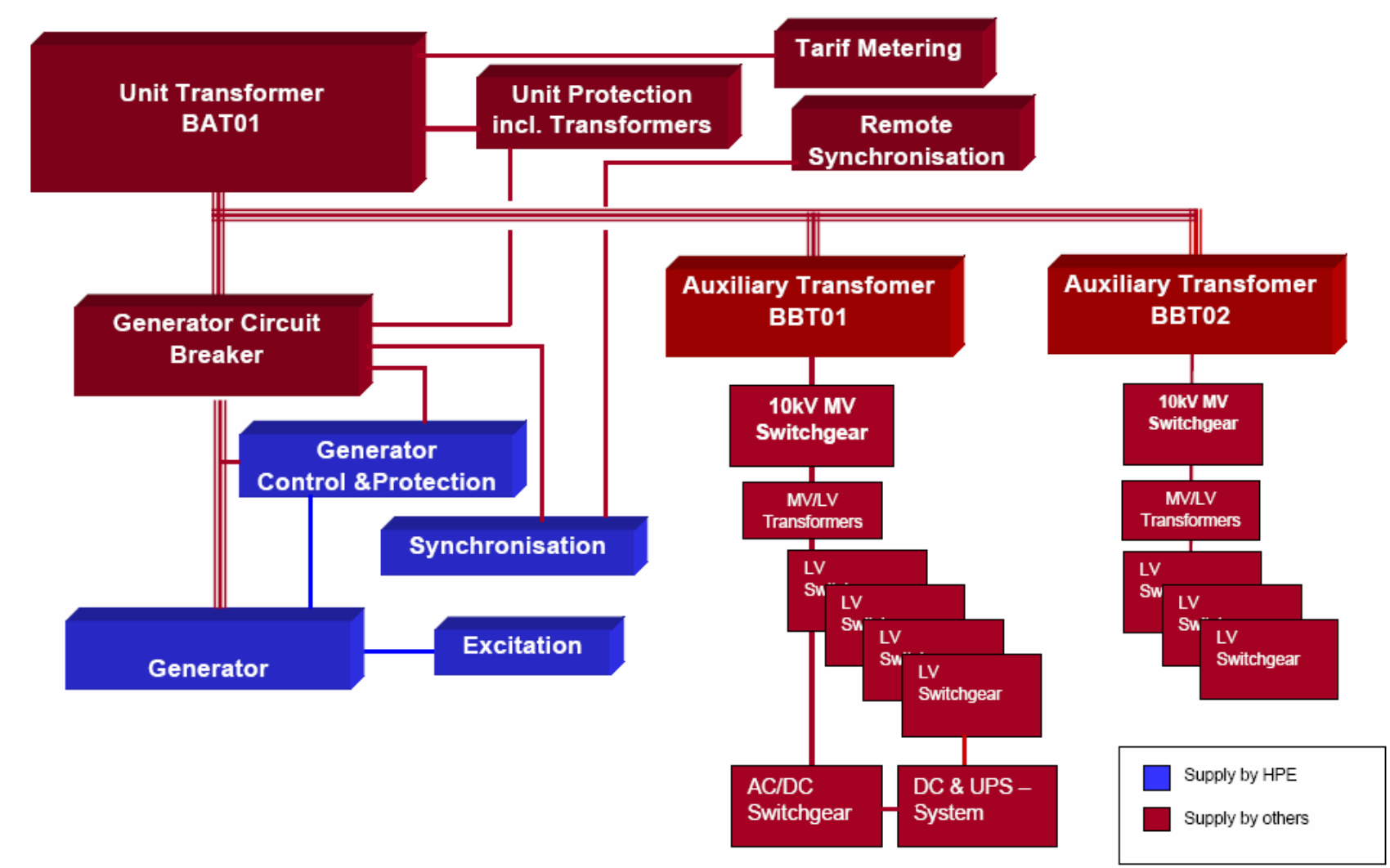

800 MW Class Coal Fired Power Train

HITACHI
Inspire the Next

Terminal Points I&C for DCS (excl. Turbine)

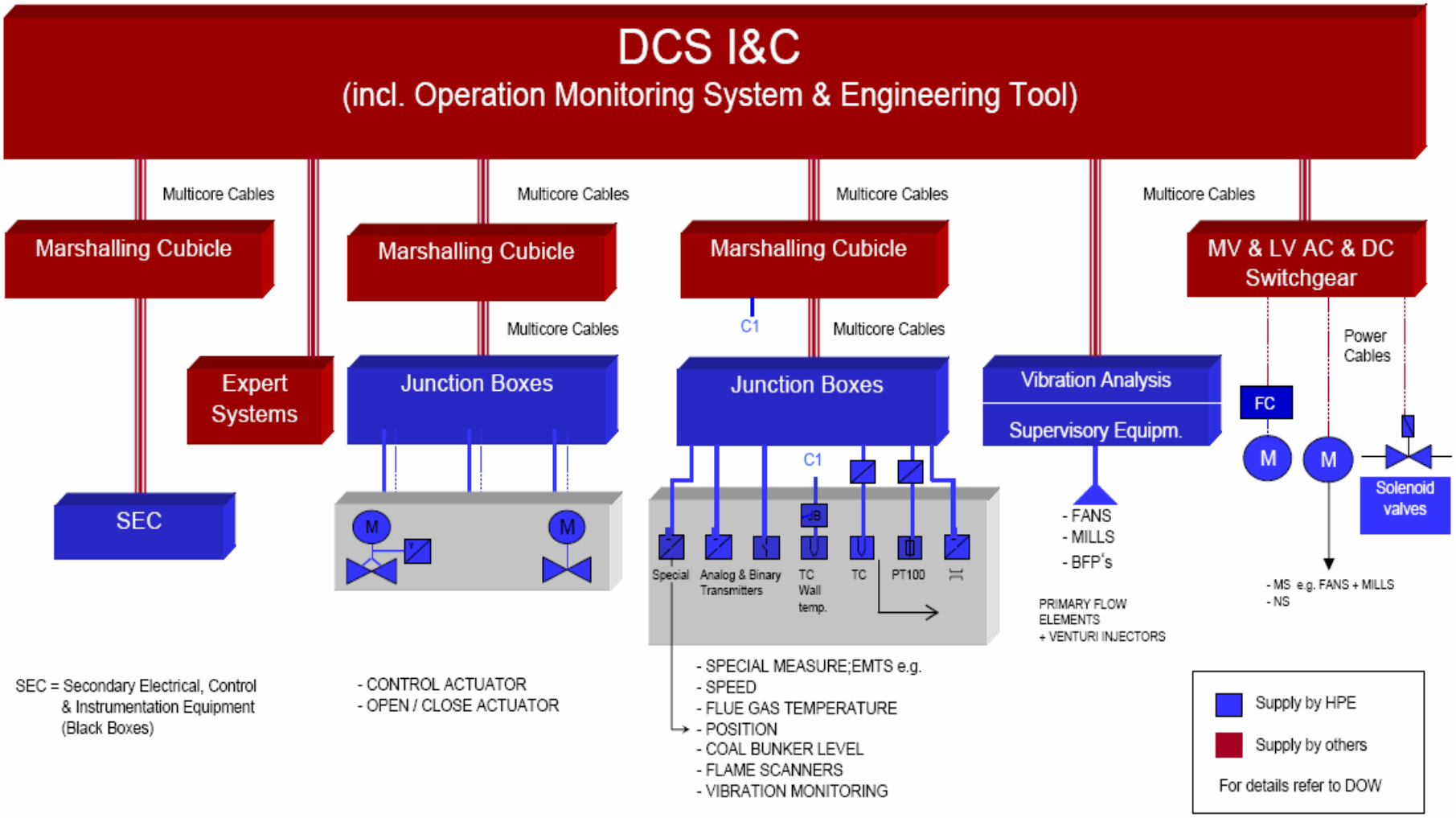

800 MW Class Coal Fired Power Train

HITACHI
Inspire the Next

Terminal Points I & C Turbine
Turbine Extended C & I: (Turbine Auxiliaries HP & LP Bypass)

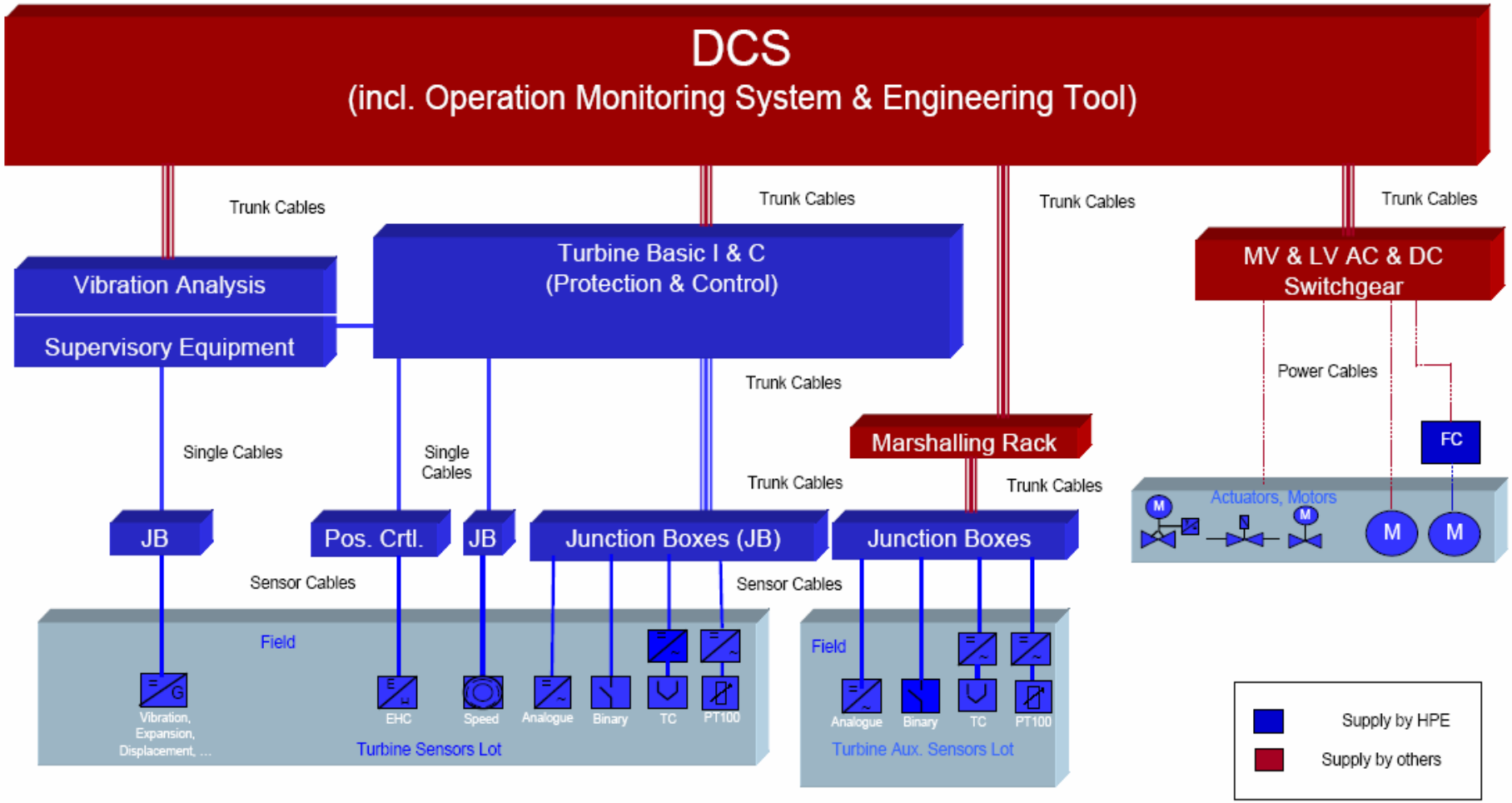

800 MW Class Coal Fired Power Train

HITACHI
Inspire the Next

Preliminary Time Schedule - Milestones

Commitment Agreement	Jan/Feb 2009
Date of Contract (PNTP)	May/June 2009
Start of permit application planning	May/June 2009
Permission to order time critical material	April 2010
Effective Date (NTP)	Sept/Oct 2010
Access to site	January 2012
Commercial operation date (PAC)	March 2015
Performance test	June 2015

800 MW Class Coal Fired Power Train

HITACHI
Inspire the Next

Supplementary supplies for completion of power plant:

- Civil works and steel building structures
- Cooling tower with internals
- Coal handling
- Ash handling
- Silos
- BoP piping
- Electrical equipment (motors, switchgears, transformers, power cabling)
- Central DCS
- Main and auxiliary cooling water
- Water treatment plants
- Fire fighting systems
- Waste water treatment
- Potable water supply

HITACHI
Inspire the Next

Thank you for your attention